SONY®

HD CAMERA ADAPTOR
HDCA-50

SONY
HDVS
High Definition Video System

HDVS

MAINTENANCE MANUAL
Volume 2 1st Edition
Serial No. 10001 and Higher

SAFETY RELATED COMPONENT WARNING

Components identified by shading and ⚠ marked on the schematic diagrams and parts list are critical to safe operation. Replace these components with SONY parts whose part numbers appear as shown in this manual or in supplements published by SONY.

このマニュアルに記載されている事柄の著作権は当社にあり，説明内容は機器購入者の使用を目的としています。
従って，当社の許可なしに無断で複写したり，説明内容（操作，保守等）と異なる目的で本マニュアルを使用することを禁止します。

The material contained in this manual consists of information that is the property of Sony Corporation and is intended solely for use by the purchasers of the equipment described in this manual.
Sony Corporation expressly prohibits the duplication of any portion of this manual or the use thereof for any purpose other than the operation or maintenance of the equipment described in this manual without the express written permission of Sony Corporation.

Le matériel contenu dans ce manuel consiste en informations qui sont la propriété de Sony Corporation et sont destinées exclusivement à l'usage des acquéreurs de l'équipement décrit dans ce manuel.
Sony Corporation interdit formellement la copie de quelque partie que ce soit de ce manuel ou son emploi pour tout autre but que des opérations ou entretiens de l'équipement à moins d'une permission écrite de Sony Corporation.

Das in dieser Anleitung enthaltene Material besteht aus Informationen, die Eigentum der Sony Corporation sind, und ausschließlich zum Gebrauch durch den Käufer der in dieser Anleitung beschriebenen Ausrüstung bestimmt sind.
Die Sony Corporation untersagt ausdrücklich die Vervielfältigung jeglicher Teile dieser Anleitung oder den Gebrauch derselben für irgendeinen anderen Zweck als die Bedienung oder Wartung der in dieser Anleitung beschriebenen Ausrüstung ohne ausdrückliche schriftliche Erlaubnis der Sony Corporation.

目 次
TABLE OF CONTENTS

Volume 1

1. 設置

2. 主要部品の交換方法

3. サービスインフォメーション

4. 調整要項

1. **INSTALLATION**

2. **REPLACEMENT OF MAIN PARTS**

3. **SERVICE INFORMATION**

4. **ALIGNMENT**

Volume 2

A. BLOCK DIAGRAMS

OVERALL BLOCK ······ A-1
PR-155/MX-33 BLOCK ······ A-2
PR-168 BLOCK ······ A-3
IE-32/34 BLOCK ······ A-4
VDA-18 BLOCK ······ A-5
SG-190 BLOCK ······ A-6
IF-346 BLOCK ······ A-7

B. SEMICONDUCTOR PIN ASSIGNMENTS

C. SCHEMATIC DIAGRAMS AND BOARD ILLUSTRATIONS

BOARD LAYOUT ······ C-1
PR-155 ······ C-2
MX-33 ······ C-4
PR-168 ······ C-6
IE-32 ······ C-8
IE-34 ······ C-10
VDA-18 ······ C-12
SG-190 ······ C-14
SW-489 ······ C-16
IF-346 ······ C-16
DP-158 ······ C-18
DSC-62 ······ C-18
MA-48 ······ C-20
FRAME (1/2) ······ C-22
  CN-782
  CN-783
  CN-784
  VR-124
  RE-76
  SW-498
FRAME (2/2) ······ C-24
  MB-366

D. SPARE PARTS

PARTS INFORMATION ······ D-1
EXPLODED VIEW ······ D-2
ELECTRICAL PARTS ······ D-6

目　次

TABLE OF CONTENTS

Volume 1

1. 設置

2. 主要部品の交換方法

3. サービスインフォメーション

4. 調整要項

1. **INSTALLATION**

2. **REPLACEMENT OF MAIN PARTS**

3. **SERVICE INFORMATION**

4. **ALIGNMENT**

Volume 2

A. BLOCK DIAGRAMS

OVERALL BLOCK ································· A-1
PR-155/MX-33 BLOCK ························ A-2
PR-168 BLOCK ································· A-3
IE-32/34 BLOCK ······························ A-4
VDA-18 BLOCK ································ A-5
SG-190 BLOCK ································ A-6
IF-346 BLOCK ································ A-7

B. SEMICONDUCTOR PIN ASSIGNMENTS

C. SCHEMATIC DIAGRAMS AND BOARD ILLUSTRATIONS

BOARD LAYOUT ································ C-1
PR-155 ··· C-2
MX-33 ·· C-4
PR-168 ··· C-6
IE-32 ··· C-8
IE-34 ··· C-10
VDA-18 ··· C-12
SG-190 ··· C-14
SW-489 ··· C-16
IF-346 ·· C-16
DP-158 ··· C-18
DSC-62 ··· C-18
MA-48 ·· C-20
FRAME (1/2) ·································· C-22
  CN-782
  CN-783
  CN-784
  VR-124
  RE-76
  SW-498
FRAME (2/2) ·································· C-24
  MB-366

D. SPARE PARTS

PARTS INFORMATION ·························· D-1
EXPLODED VIEW ······························ D-2
ELECTRICAL PARTS ··························· D-6

SECTION A
BLOCK DIAGRAMS

OVERALL BLOCK

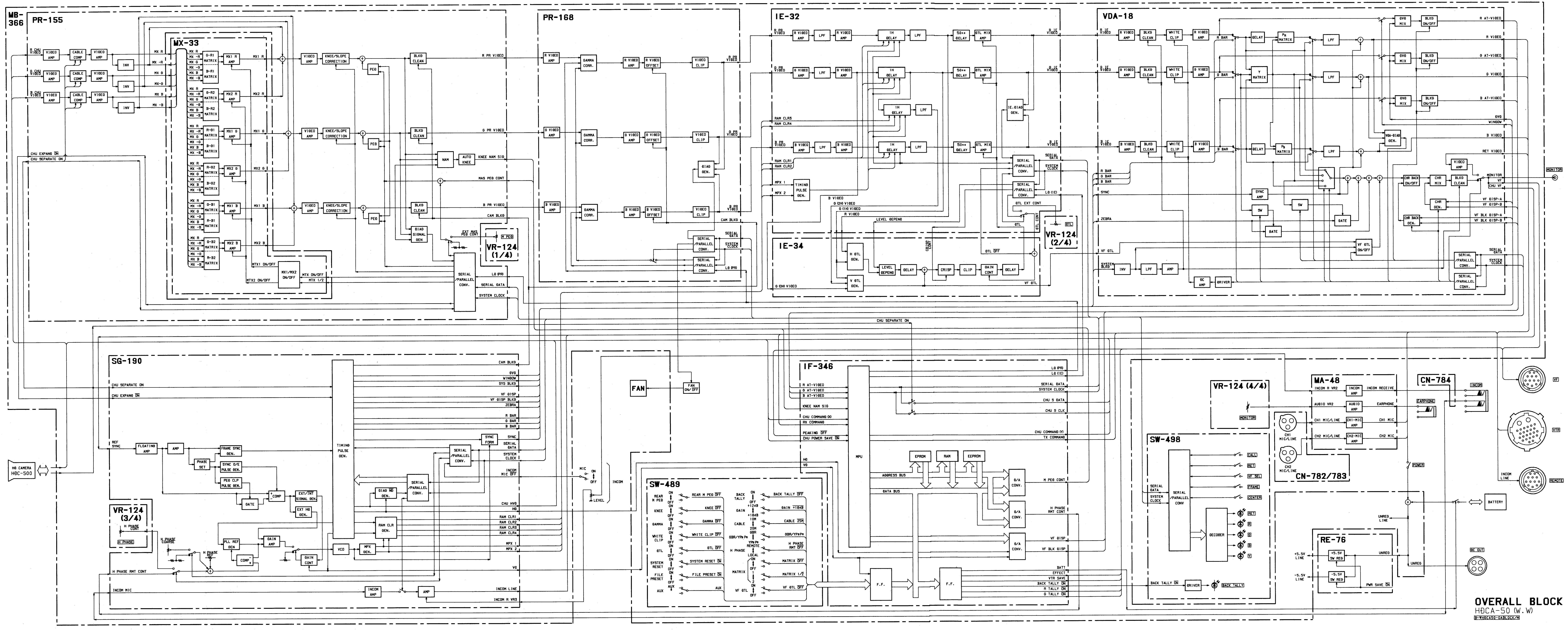
MB-366
PR-155
MX-33
PR-168
IE-32
IE-34
VDA-18
VR-124 (1/4)
VR-124 (2/4)
VR-124 (3/4)
VR-124 (4/4)
SG-190
FAN
IF-346
SW-489
SW-498
MA-48
CN-784
CN-782/783
RE-76
HD CAMERA HDC-500
VIDEO AMP
CABLE COMP
INV
MATRIX
KNEE/SLOPE CORRECTION
PED
BLKG CLEAN
GAMMA CORR.
R VIDEO AMP
R VIDEO OFFSET
VIDEO CLIP
SERIAL /PARALLEL CONV.
1H DELAY
LPF
DTL MIX
H DTL GEN.
V DTL GEN.
LEVEL DEPEND
CRISP
CLIP
GAIN CONT
DELAY
WHITE CLIP
Y MATRIX
SYNC AMP
GATE
SW
DRIVER
VF DTL ON/OFF
TIMING PULSE GEN.
FLOATING AMP
AMP
PHASE SET
FRAME SYNC GEN.
SYNC D/E PULSE GEN.
PED CLP PULSE GEN.
EXT/INT SIGNAL GEN.
EXT HD GEN.
PLL REF GEN.
COMP
VCO
RAM CLR GEN.
BIAS NG GEN.
SYNC FORM
INCOM AMP
MPU
EEPROM
RAM
ADDRESS BUS
DATA BUS
D/A CONV.
F.F.
DECODER
MONITOR
VF
VTR
REMOTE
BATTERY
DC OUT
INCOM LINE
EARPHONE
POWER
BACK TALLY
CALL
RET
VF SEL
FRAME
CENTER
OVERALL BLOCK
HDCA-50 (W.W)

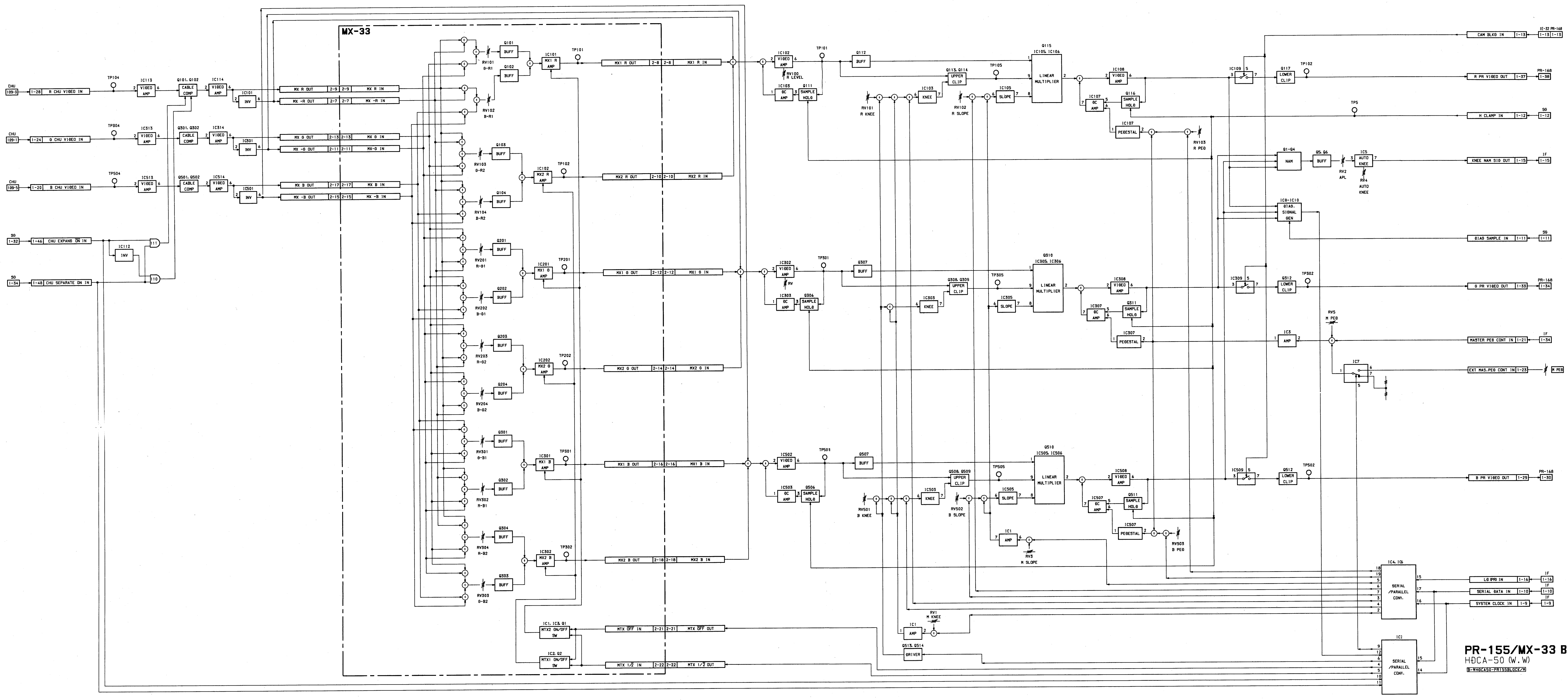
MX-33
CHU 109-3
1-28 R CHU VIDEO IN
CHU 109-1
1-24 G CHU VIDEO IN
CHU 109-5
1-20 B CHU VIDEO IN
SG 1-32
1-46 CHU EXPAND ON IN
SG 1-34
1-48 CHU SEPARATE ON IN
TP104
TP304
TP504
IC113 VIDEO AMP
IC313 VIDEO AMP
IC513 VIDEO AMP
Q101, Q102 CABLE COMP
Q301, Q302 CABLE COMP
Q501, Q502 CABLE COMP
IC114 VIDEO AMP
IC314 VIDEO AMP
IC514 VIDEO AMP
IC101 INV
IC301 INV
IC501 INV
IC112 INV
111
110
MX R OUT 2-9 2-9 MX R IN
MX -R OUT 2-7 2-7 MX -R IN
MX G OUT 2-13 2-13 MX G IN
MX -G OUT 2-11 2-11 MX-G IN
MX B OUT 2-17 2-17 MX B IN
MX -B OUT 2-15 2-15 MX -B IN
BUFF
MX1 R AMP
MX2 R AMP
MX1 G AMP
MX2 G AMP
MX1 B AMP
MX2 B AMP
MX1 R OUT 2-8 2-8 MX1 R IN
MX2 R OUT 2-10 2-10 MX2 R IN
MX1 G OUT 2-12 2-12 MX1 G IN
MX2 G OUT 2-14 2-14 MX2 G IN
MX1 B OUT 2-16 2-16 MX1 B IN
MX2 B OUT 2-18 2-18 MX2 B IN
MTX2 ON/OFF SW
MTX1 ON/OFF SW
MTX OFF IN 2-21 2-21 MTX OFF OUT
MTX 1/2 IN 2-22 2-22 MTX 1/2 OUT
IC102 VIDEO AMP
RV100 R LEVEL
TP101
IC103 DC AMP
Q111 SAMPLE HOLD
Q112 BUFF
Q113, Q114 UPPER CLIP
TP105
IC103 KNEE
RV101 R KNEE
RV102 R SLOPE
IC105 SLOPE
Q115 IC105, IC106 LINEAR MULTIPLIER
IC108 VIDEO AMP
IC107 DC AMP
Q116 SAMPLE HOLD
IC107 PEDESTAL
RV103 R PED
IC109
Q117 LOWER CLIP
TP102
TP5
Q1-Q4 NAM
Q5, Q6 BUFF
RV2 APL
IC5 AUTO KNEE
RV4 AUTO KNEE
IC8-IC10 DIAG. SIGNAL GEN
IC3 AMP
RV5 M PED
IC7
IC1 AMP
RV1 M KNEE
Q513, Q514 DRIVER
IC1 AMP
RV3 M SLOPE
IC4, IC6 SERIAL /PARALLEL CONV.
IC1 SERIAL /PARALLEL CONV.
CAM BLKG IN 1-13
IE-32 PR-168 1-13 1-13
R PR VIDEO OUT 1-37
PR-168 1-38
H CLAMP IN 1-12
SG 1-12
KNEE NAM SIG OUT 1-15
IF 1-15
DIAG SAMPLE IN 1-11
SG 1-11
G PR VIDEO OUT 1-33
PR-168 1-34
MASTER PED CONT IN 1-21
IF 1-34
EXT MAS.PED CONT IN 1-23
M PED
B PR VIDEO OUT 1-29
PR-168 1-30
LD (PR) IN 1-16
IF 1-16
SERIAL DATA IN 1-10
IF 1-10
SYSTEM CLOCK IN 1-9
IF 1-9

PR-155/MX-33 BLOCK
HDCA-50 (W.W)
B-¥HDCA50-PR155BLOCK/M

PR-168 BLOCK

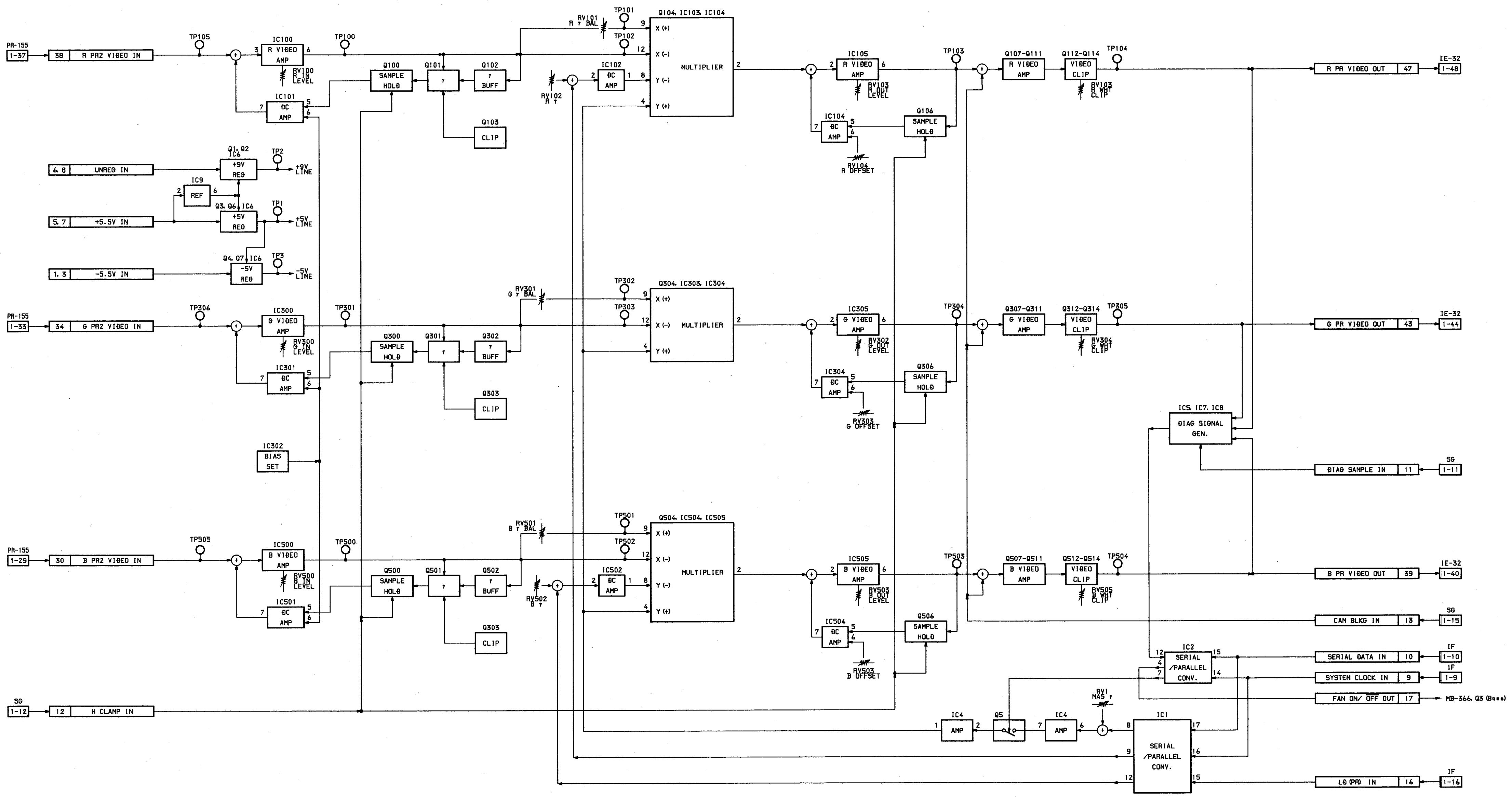
PR-155
1-37
38 R PR2 VIDEO IN
TP105
IC100
R VIDEO AMP
RV100 R IN LEVEL
IC101
DC AMP
TP100
Q100
SAMPLE HOLD
Q101
Q102
γ BUFF
Q103
CLIP
RV101 R γ BAL
TP101
TP102
RV102 R γ
IC102
DC AMP
Q104, IC103, IC104
X (+)
X (-)
Y (-)
Y (+)
MULTIPLIER
IC105
R VIDEO AMP
RV103 R OUT LEVEL
IC104
DC AMP
RV104 R OFFSET
Q106
SAMPLE HOLD
TP103
Q107-Q111
R VIDEO AMP
Q112-Q114
VIDEO CLIP
RV103 R WHT CLIP
TP104
R PR VIDEO OUT 47
IE-32
1-48
Q1, Q2 IC6
+9V REG
TP2
+9V LINE
6, 8 UNREG IN
IC9
REF
Q3, Q6, IC6
+5V REG
TP1
+5V LINE
5, 7 +5.5V IN
Q4, Q7, IC6
-5V REG
TP3
-5V LINE
1, 3 -5.5V IN
PR-155
1-33
34 G PR2 VIDEO IN
TP306
IC300
G VIDEO AMP
RV300 G IN LEVEL
IC301
DC AMP
TP301
Q300
SAMPLE HOLD
Q301
Q302
γ BUFF
Q303
CLIP
RV301 G γ BAL
TP302
TP303
Q304, IC303, IC304
MULTIPLIER
IC305
G VIDEO AMP
RV302 G OUT LEVEL
IC304
DC AMP
RV303 G OFFSET
Q306
SAMPLE HOLD
TP304
Q307-Q311
G VIDEO AMP
Q312-Q314
VIDEO CLIP
RV304 G WHT CLIP
TP305
G PR VIDEO OUT 43
IE-32
1-44
IC5, IC7, IC8
DIAG SIGNAL GEN.
DIAG SAMPLE IN 11
SG
1-11
IC302
BIAS SET
PR-155
1-29
30 B PR2 VIDEO IN
TP505
IC500
B VIDEO AMP
RV500 B IN LEVEL
IC501
DC AMP
TP500
Q500
SAMPLE HOLD
Q501
Q502
γ BUFF
Q303
CLIP
RV501 B γ BAL
TP501
TP502
RV502 B γ
IC502
DC AMP
Q504, IC504, IC505
MULTIPLIER
IC505
B VIDEO AMP
RV503 B OUT LEVEL
IC504
DC AMP
RV503 B OFFSET
Q506
SAMPLE HOLD
TP503
Q507-Q511
B VIDEO AMP
Q512-Q514
VIDEO CLIP
RV505 B WHT CLIP
TP504
B PR VIDEO OUT 39
IE-32
1-40
CAM BLKG IN 13
SG
1-15
IC2
SERIAL /PARALLEL CONV.
SERIAL DATA IN 10
IF
1-10
SYSTEM CLOCK IN 9
IF
1-9
FAN ON/ OFF OUT 17
MB-366, Q3 (Base)
SG
1-12
12 H CLAMP IN
IC4
AMP
Q5
IC4
AMP
RV1 MAS γ
IC1
SERIAL /PARALLEL CONV.
LD (PR) IN 16
IF
1-16

PR-168 BLOCK
HDCA-50 (W.W)
B-¥HDCA50-PR168BLOCK/M

IE-32 BLOCK
IE-34 BLOCK

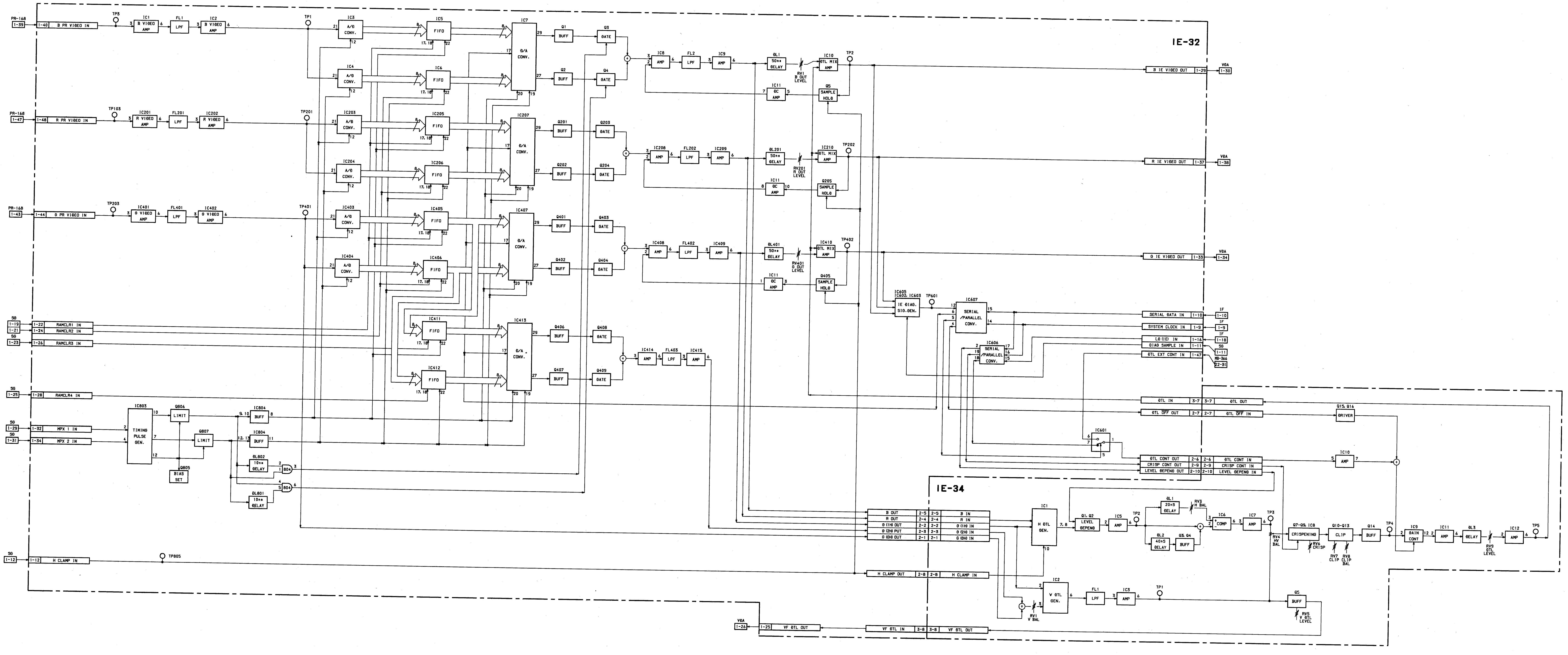
IE-32
IE-34
PR-168
1-39
1-40 B PR VIDEO IN
TP3
IC1 B VIDEO AMP
FL1 LPF
IC2 B VIDEO AMP
TP1
IC3 A/D CONV.
IC4 A/D CONV.
IC5 FIFO
IC6 FIFO
IC7 D/A CONV.
Q1 BUFF
Q2 BUFF
Q3 GATE
Q4 GATE
IC8 AMP
FL2 LPF
IC9 AMP
DL1 50ns DELAY
RV1 B OUT LEVEL
IC10 DTL MIX AMP
TP2
IC11 DC AMP
Q5 SAMPLE HOLD
B IE VIDEO OUT 1-29
VDA 1-30
PR-168
1-47
1-48 R PR VIDEO IN
TP103
IC201 R VIDEO AMP
FL201 LPF
IC202 R VIDEO AMP
TP201
IC203 A/D CONV.
IC204 A/D CONV.
IC205 FIFO
IC206 FIFO
IC207 D/A CONV.
Q201 BUFF
Q202 BUFF
Q203 GATE
Q204 GATE
IC208 AMP
FL202 LPF
IC209 AMP
DL201 50ns DELAY
RV201 R OUT LEVEL
IC210 DTL MIX AMP
TP202
IC11 DC AMP
Q205 SAMPLE HOLD
R IE VIDEO OUT 1-37
VDA 1-38
PR-168
1-43
1-44 G PR VIDEO IN
TP203
IC401 G VIDEO AMP
FL401 LPF
IC402 G VIDEO AMP
TP401
IC403 A/D CONV.
IC404 A/D CONV.
IC405 FIFO
IC406 FIFO
IC407 D/A CONV.
Q401 BUFF
Q402 BUFF
Q403 GATE
Q404 GATE
IC408 AMP
FL402 LPF
IC409 AMP
DL401 50ns DELAY
RV401 G OUT LEVEL
IC410 DTL MIX AMP
TP402
IC11 DC AMP
Q405 SAMPLE HOLD
G IE VIDEO OUT 1-33
VDA 1-34
SG 1-19 1-22 RAMCLR1 IN
1-21 1-24 RAMCLR2 IN
SG 1-23 1-26 RAMCLR3 IN
IC411 FIFO
IC412 FIFO
IC413 D/A CONV.
Q406 BUFF
Q407 BUFF
Q408 GATE
Q409 GATE
IC414 AMP
FL403 LPF
IC415 AMP
SG 1-25 1-28 RAMCLR4 IN
SG 1-29 1-32 MPX 1 IN
SG 1-31 1-34 MPX 2 IN
IC803 TIMING PULSE GEN.
Q806 LIMIT
Q807 LIMIT
Q805 BIAS SET
IC804 BUFF
IC804 BUFF
DL802 10ns DELAY
DL801 10ns DELAY
804
804
SG 1-12 1-12 H CLAMP IN
TP805
VDA 1-26 1-25 VF DTL OUT
IC605 IC602, IC603 IE DIAG. SIG. GEN.
TP601
IC607 SERIAL /PARALLEL CONV.
IC606 SERIAL /PARALLEL CONV.
SERIAL DATA IN 1-10 IF 1-10
SYSTEM CLOCK IN 1-9 IF 1-9
LD (IE) IN 1-16 IF 1-18
DIAG SAMPLE IN 1-11 SG 1-11
DTL EXT CONT IN 1-47 MB-366 22-B1
DTL IN 3-7 3-7 DTL OUT
DTL OFF OUT 2-7 2-7 DTL OFF IN
IC601
DTL CONT OUT 2-6 2-6 DTL CONT IN
CRISP CONT OUT 2-9 2-9 CRISP CONT IN
LEVEL DEPEND OUT 2-10 2-10 LEVEL DEPEND IN
Q15, Q16 DRIVER
IC10 AMP
B OUT 2-5 2-5 B IN
R OUT 2-4 2-4 R IN
G (1H) OUT 2-2 2-2 G (1H) IN
G (2H) PUT 2-3 2-3 G (2H) IN
G (0H) OUT 2-1 2-1 G (0H) IN
H CLAMP OUT 2-8 2-8 H CLAMP IN
VF DTL IN 3-8 3-8 VF DTL OUT
IC1 H DTL GEN.
Q1, Q2 LEVEL DEPEND
IC5 AMP
TP2
DL1 20nS DELAY
RV3 H BAL
DL2 40nS DELAY
Q3, Q4 BUFF
IC6 COMP
IC7 AMP
TP3
RV4 HV BAL
Q7-Q9, IC8 CRISPENING
RV6 CRISP
Q10-Q13 CLIP
RV7 CLIP
RV8 CLIP BAL
Q14 BUFF
TP4
IC9 GAIN CONT
IC11 AMP
DL3 DELAY
RV9 DTL LEVEL
IC12 AMP
TP5
IC2 V DTL GEN.
RV1 V BAL
FL1 LPF
IC3 AMP
TP1
Q5 BUFF
RV5 V DTL LEVEL

IE-32/34 BLOCK
HDCA-50 (W.W)
B-¥HDCA50-IE32BLOCK/M

VDA-18 BLOCK

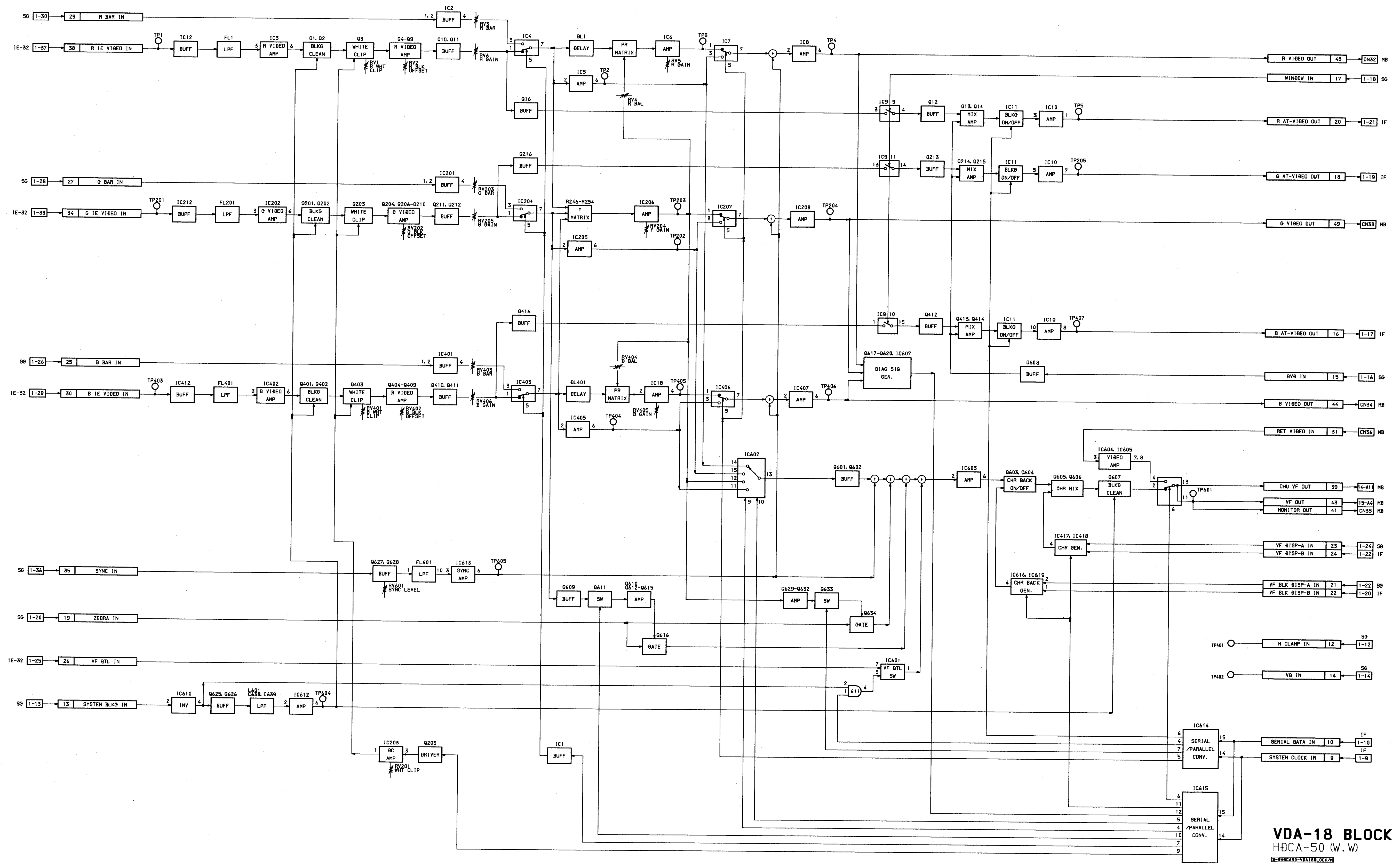
SG 1-30 29 R BAR IN
IE-32 1-37 38 R IE VIDEO IN
TP1
IC12 BUFF
FL1 LPF
IC3 R VIDEO AMP
Q1, Q2 BLKG CLEAN
Q3 WHITE CLIP
Q4-Q9 R VIDEO AMP
Q10, Q11 BUFF
IC2 BUFF
RV3 R BAR
RV6 R GAIN
RV1 R WHT CLIP
RV2 R BLK OFFSET
IC4
DL1 DELAY
PR MATRIX
IC6 AMP
RV5 R GAIN
TP3
IC7
IC8 AMP
TP4
IC5 AMP
TP2
RV4 R BAL
Q16 BUFF
SG 1-28 27 G BAR IN
IE-32 1-33 34 G IE VIDEO IN
TP201
IC212 BUFF
FL201 LPF
IC202 G VIDEO AMP
Q201, Q202 BLKG CLEAN
Q203 WHITE CLIP
Q204, Q206-Q210 G VIDEO AMP
Q211, Q212 BUFF
Q216 BUFF
IC201 BUFF
RV203 G BAR
RV205 G GAIN
RV202 G BLK OFFSET
IC204
R246-R254 Y MATRIX
IC206 AMP
RV204 Y GAIN
TP203
IC207
IC208 AMP
TP204
IC205 AMP
TP202
Q416 BUFF
SG 1-26 25 B BAR IN
IE-32 1-29 30 B IE VIDEO IN
TP403
IC412 BUFF
FL401 LPF
IC402 B VIDEO AMP
Q401, Q402 BLKG CLEAN
Q403 WHITE CLIP
Q404-Q409 B VIDEO AMP
Q410, Q411 BUFF
IC401 BUFF
RV403 B BAR
RV406 B GAIN
RV401 B WHT CLIP
RV402 B BLK OFFSET
IC403
DL401 DELAY
PR MATRIX
RV404 B BAL
IC18 AMP
RV405 B GAIN
TP405
IC406
IC407 AMP
TP406
IC405 AMP
TP404
IC602
IC9
Q12 BUFF
Q13, Q14 MIX AMP
IC11 BLKG ON/OFF
IC10 AMP
TP5
Q213 BUFF
Q214, Q215 MIX AMP
TP205
Q412 BUFF
Q413, Q414 MIX AMP
TP407
Q417-Q420, IC607 DIAG SIG GEN.
Q608 BUFF
Q601, Q602 BUFF
IC603 AMP
Q603, Q604 CHR BACK ON/OFF
Q605, Q606 CHR MIX
Q607 BLKG CLEAN
IC604, IC605 VIDEO AMP
TP601
IC417, IC418 CHR GEN.
IC616, IC619 CHR BACK GEN.
R VIDEO OUT 48 CN32 MB
WINDOW IN 17 1-18 SG
R AT-VIDEO OUT 20 1-21 IF
G AT-VIDEO OUT 18 1-19 IF
G VIDEO OUT 49 CN33 MB
B AT-VIDEO OUT 16 1-17 IF
DVD IN 15 1-16 SG
B VIDEO OUT 44 CN34 MB
RET VIDEO IN 31 CN36 MB
CHU VF OUT 39 14-A11 MB
VF OUT 43 15-A4 MB
MONITOR OUT 41 CN35 MB
VF DISP-A IN 23 1-24 SG
VF DISP-B IN 24 1-22 IF
VF BLK DISP-A IN 21 1-22 SG
VF BLK DISP-B IN 22 1-20 IF
SG 1-36 35 SYNC IN
Q627, Q628 BUFF
RV601 SYNC LEVEL
FL601 LPF
IC613 SYNC AMP
TP605
SG 1-20 19 ZEBRA IN
Q609 BUFF
Q611 SW
Q610, Q612-Q615 AMP
Q616 GATE
Q629-Q632 AMP
Q633 SW
Q634 GATE
IE-32 1-25 26 VF DTL IN
IC601 VF DTL SW
IC611
SG 1-13 13 SYSTEM BLKG IN
IC610 INV
Q625, Q626 BUFF
L601, C638, C639 LPF
IC612 AMP
TP604
IC203 DC AMP
RV201 WHT CLIP
Q205 DRIVER
IC1 BUFF
TP401 H CLAMP IN 12 SG 1-12
TP402 VD IN 14 SG 1-14
IC614 SERIAL /PARALLEL CONV.
SERIAL DATA IN 10 IF 1-10
SYSTEM CLOCK IN 9 IF 1-9
IC615 SERIAL /PARALLEL CONV.

VDA-18 BLOCK
HDCA-50 (W.W)

SG-190 BLOCK

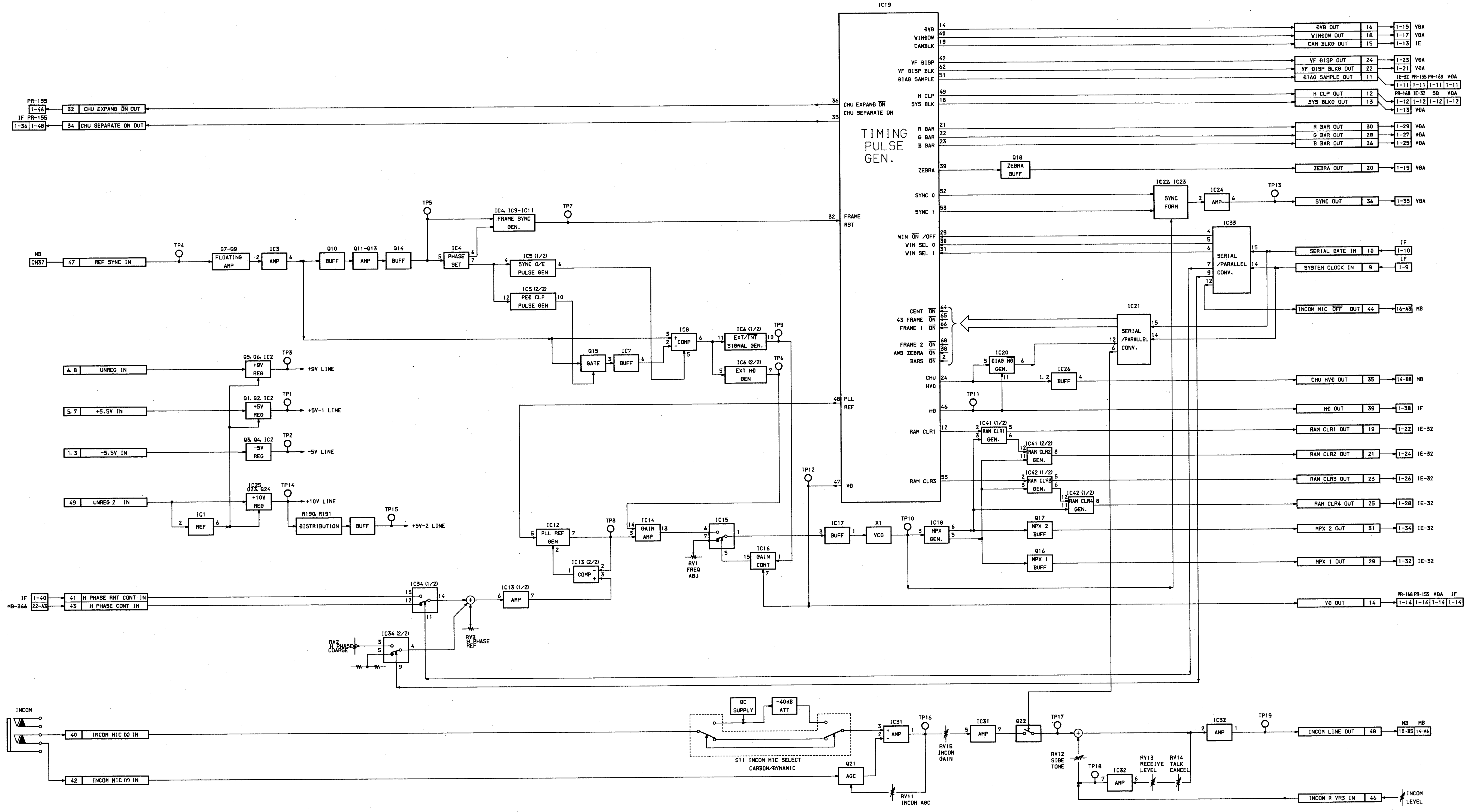
IC19
TIMING PULSE GEN.
BVD
WINDOW
CAMBLK
VF DISP
VF DISP BLK
DIAG SAMPLE
H CLP
SYS BLK
CHU EXPAND ON
CHU SEPARATE ON
R BAR
G BAR
B BAR
ZEBRA
SYNC 0
SYNC 1
FRAME RST
WIN ON /OFF
WIN SEL 0
WIN SEL 1
CENT ON
43 FRAME ON
FRAME 1 ON
FRAME 2 ON
AWB ZEBRA ON
BARS ON
CHU HVD
HD
PLL REF
RAM CLR1
RAM CLR3
VD
BVD OUT 16 1-15 VDA
WINDOW OUT 18 1-17 VDA
CAM BLKG OUT 15 1-13 IE
VF DISP OUT 24 1-23 VDA
VF DISP BLKG OUT 22 1-21 VDA
DIAG SAMPLE OUT 11
IE-32 PR-155 PR-168 VDA
1-11 1-11 1-11 1-11
H CLP OUT 12
SYS BLKG OUT 13
PR-168 IE-32 SG VDA
1-12 1-12 1-12 1-12
1-13 VDA
R BAR OUT 30 1-29 VDA
G BAR OUT 28 1-27 VDA
B BAR OUT 26 1-25 VDA
Q18 ZEBRA BUFF
ZEBRA OUT 20 1-19 VDA
IC22, IC23 SYNC FORM
IC24 AMP
TP13
SYNC OUT 36 1-35 VDA
IC33 SERIAL /PARALLEL CONV.
SERIAL DATE IN 10 IF 1-10
SYSTEM CLOCK IN 9 IF 1-9
INCOM MIC OFF OUT 44 16-A3 MB
IC21 SERIAL /PARALLEL CONV.
IC20 DIAG ND GEN.
IC26 BUFF
CHU HVD OUT 35 14-B8 MB
TP11
HD OUT 39 1-38 IF
IC41 (1/2) RAM CLR1 GEN.
IC41 (2/2) RAM CLR2 GEN.
IC42 (1/2) RAM CLR3 GEN.
IC42 (1/2) RAM CLR4 GEN.
RAM CLR1 OUT 19 1-22 IE-32
RAM CLR2 OUT 21 1-24 IE-32
RAM CLR3 OUT 23 1-26 IE-32
RAM CLR4 OUT 25 1-28 IE-32
Q17 MPX 2 BUFF
MPX 2 OUT 31 1-34 IE-32
Q16 MPX 1 BUFF
MPX 1 OUT 29 1-32 IE-32
PR-168 PR-155 VDA IF
VD OUT 14 1-14 1-14 1-14 1-14
PR-155 1-46 32 CHU EXPAND ON OUT
IF PR-155 1-36 1-48 34 CHU SEPARATE ON OUT
MB CN37 47 REF SYNC IN
TP4
Q7-Q9 FLOATING AMP
IC3 AMP
Q10 BUFF
Q11-Q13 AMP
Q14 BUFF
TP5
IC4 PHASE SET
IC4, IC9-IC11 FRAME SYNC GEN.
TP7
IC5 (1/2) SYNC O/E PULSE GEN
IC5 (2/2) PED CLP PULSE GEN
Q15 GATE
IC7 BUFF
IC8 COMP
IC6 (1/2) EXT/INT SIGNAL GEN.
TP9
IC6 (2/2) EXT HD GEN
TP6
6, 8 UNREG IN
Q5, Q6, IC2 +9V REG
TP3
+9V LINE
5, 7 +5.5V IN
Q1, Q2, IC2 +5V REG
TP1
+5V-1 LINE
1, 3 -5.5V IN
Q3, Q4, IC2 -5V REG
TP2
-5V LINE
49 UNREG 2 IN
IC25 Q23, Q24 +10V REG
TP14
+10V LINE
IC1 REF
R190, R191 DISTRIBUTION
BUFF
TP15
+5V-2 LINE
TP12
IC12 PLL REF GEN
TP8
IC14 GAIN AMP
IC15
RV1 FREQ ADJ
IC16 GAIN CONT
IC13 (2/2) COMP
IC17 BUFF
X1 VCO
TP10
IC18 MPX GEN.
IF 1-40 41 H PHASE RMT CONT IN
MB-366 22-A3 43 H PHASE CONT IN
IC34 (1/2)
IC13 (1/2) AMP
RV3 H PHASE REF
RV2 H PHASE COARSE
IC34 (2/2)
INCOM
40 INCOM MIC DO IN
42 INCOM MIC (Y) IN
DC SUPPLY
-40dB ATT
S11 INCOM MIC SELECT CARBON/DYNAMIC
Q21 AGC
RV11 INCOM AGC
IC31 AMP
TP16
RV15 INCOM GAIN
IC31 AMP
Q22
TP17
RV12 SIDE TONE
TP18
IC32 AMP
RV13 RECEIVE LEVEL
RV14 TALK CANCEL
IC32 AMP
TP19
INCOM LINE OUT 48 MB 10-B5 MB 14-A4
INCOM R VR3 IN 46
INCOM LEVEL

SG-190 BLOCK
HDCA-50 (W.W)
B-WHDCA50-SG190BLOCK/M

IF-346 BLOCK

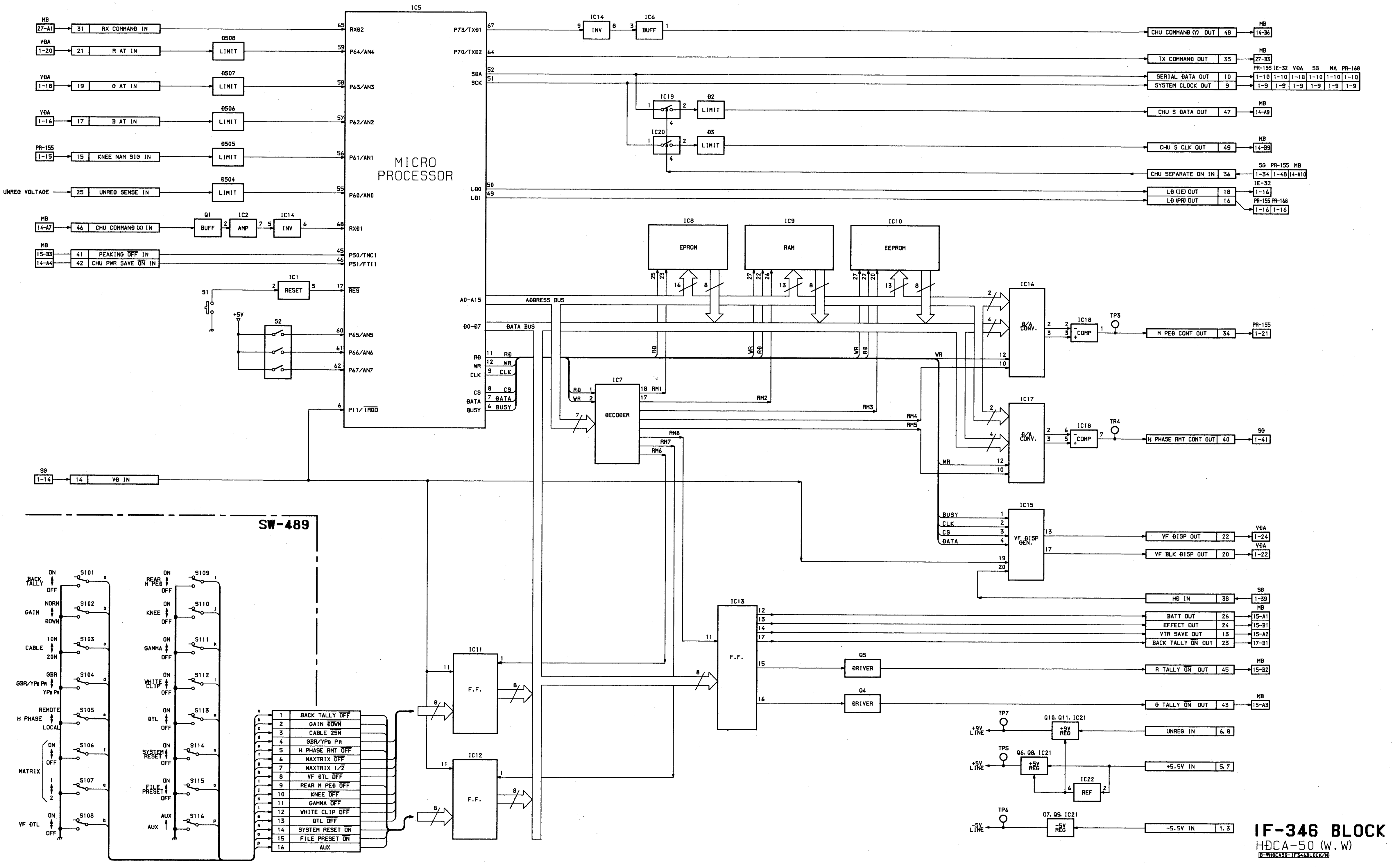
IC5
MICRO PROCESSOR
RX COMMAND IN
R AT IN
G AT IN
B AT IN
KNEE NAM SIG IN
UNREG VOLTAGE
UNREG SENSE IN
CHU COMMAND (X) IN
PEAKING OFF IN
CHU PWR SAVE ON IN
LIMIT
BUFF
AMP
INV
RESET
RXD2
P64/AN4
P63/AN3
P62/AN2
P61/AN1
P60/AN0
RXD1
P50/TMC1
P51/FTI1
RES
P65/AN5
P66/AN6
P67/AN7
P11/IRQ0
P73/TXD1
P70/TXD2
SDA
SCK
LD0
LD1
A0-A15
D0-D7
RD
WR
CLK
CS
DATA
BUSY
ADDRESS BUS
DATA BUS
IC8 EPROM
IC9 RAM
IC10 EEPROM
IC7 DECODER
IC16 D/A CONV.
IC17 D/A CONV.
IC18 COMP
IC15 VF DISP GEN.
IC11 F.F.
IC12 F.F.
IC13 F.F.
DRIVER
CHU COMMAND (Y) OUT
TX COMMAND OUT
SERIAL DATA OUT
SYSTEM CLOCK OUT
CHU S DATA OUT
CHU S CLK OUT
CHU SEPARATE ON IN
LD (IE) OUT
LD (PR) OUT
M PED CONT OUT
H PHASE RMT CONT OUT
VF DISP OUT
VF BLK DISP OUT
HD IN
BATT OUT
EFFECT OUT
VTR SAVE OUT
BACK TALLY ON OUT
R TALLY ON OUT
G TALLY ON OUT
UNREG IN
+5.5V IN
-5.5V IN
+9V REG
+5V REG
-5V REG
REF
TP3
TR4
TP5
TP6
TP7
VD IN
SW-489
S101 BACK TALLY ON OFF
S102 GAIN NORM DOWN
S103 CABLE 10M 20M
S104 GBR/YPB PR
S105 H PHASE REMOTE LOCAL
S106 MATRIX ON OFF
S107 1 2
S108 VF DTL ON OFF
S109 REAR M PED ON OFF
S110 KNEE ON OFF
S111 GAMMA ON OFF
S112 WHITE CLIP ON OFF
S113 DTL ON OFF
S114 SYSTEM RESET ON OFF
S115 FILE PRESET ON OFF
S116 AUX
1 BACK TALLY OFF
2 GAIN DOWN
3 CABLE 25M
4 GBR/YPB PR
5 H PHASE RMT OFF
6 MAXTRIX OFF
7 MAXTRIX 1/2
8 VF DTL OFF
9 REAR M PED OFF
10 KNEE OFF
11 GAMMA OFF
12 WHITE CLIP OFF
13 DTL OFF
14 SYSTEM RESET ON
15 FILE PRESET ON
16 AUX
MB
VDA
PR-155
IE-32
SG
MA
PR-168

IF-346 BLOCK
HDCA-50 (W.W)

SECTION B
SEMICONDUCTOR PIN ASSIGNMENT

The circuit diagram of IC is obtained from the IC data book published by the manufacturer.

TYPE	PAGE
1SS181	B-2
1SS226	B-2
2SA1610	B-2
2SA1611	B-2
2SB1114	B-2
2SB1121	B-2
2SC4176	B-2
2SC4177	B-2
2SD1614	B-2
2SD1621	B-2
2SJ182S	B-2
2SK1374	B-2
2SK209G	B-2
3SK163	B-2
74ACT74SJ	B-3
AD7542JP	B-3
AT27C512R-15JC	B-3
CLC505AJE	B-4
CXA1297M	B-4
CXA1432M	B-4
CXA1450M	B-4
CXA1451M	B-4
CXD1177Q	B-5
CXD1179Q	B-5
CXK1202Q	B-6
DTC114EU	B-2
EA30QS04-F	B-2
EA60QC06-F	B-2
EC10QS-06	B-2
EPM5128JC	B-6
HD14053BFP	B-10
HD6475208CP	B-7
HM6264ALFP-10	B-8
HN58C66FP-25	B-8
LC-204MB	B-2
M62352GP	B-9
MA141WA	B-2
MA141WK	B-2
MA143	B-2
MA728	B-2
MA8027-L	B-2
MC14046BF	B-9
MC14051BF	B-9
MC14053BF	B-10
MC14490F	B-10
MC1495M	B-10
MC74ACT08M	B-10
MU03-2201	B-2
NJM1496M	B-11
NJM386BM	B-10
NJM4556M-A	B-11
OP-07CPS	B-10
PCF8574AT	B-11
PCF8574T	B-11
PG4553KY	B-2
RC1496M	B-11
RC4556MA	B-11
RD ? ?M	B-2
REF-03GS	B-11
SC7S00F	B-13
SC7S02F	B-14
SC7S04F	B-14
SC7S32F	B-14
SN74HC139ANS	B-11
SN74HC193ANS	B-11
SN74HC241ANS	B-12
SN74HC574ANS	B-12
SN74HC74ANS	B-3
SN75ALS181NS	B-12
TC40H004F	B-12
TC4S584F	B-12
TC4S66F	B-12
TC4S71F	B-12
TC4W53F	B-13
TC74AC164F	B-13
TC74HC4052AF	B-13
TC74HC4053AF	B-13
TC74HC4538AF	B-13
TC7S00F	B-13
TC7S02F	B-14
TC7S04F	B-14
TC7S08F	B-14
TC7S32F	B-14
TC9800FW	B-14
TL1451ACNS	B-14
TL712CPS	B-14
TL7705CPS-B	B-15
TLC27L2CPS	B-15
TLC339CNS	B-15
UPA103G	B-15
UPC311G2	B-15
UPC4062G2	B-15
UPC4064G	B-15
UPD6453GT	B-16
UZM ? ?X	B-2

DIODE, TRANSISTOR

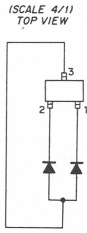
(SCALE 4/1)
TOP VIEW
3
2
1

1SS181

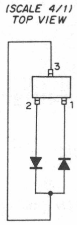
(SCALE 4/1)
TOP VIEW
3
2
1

1SS226

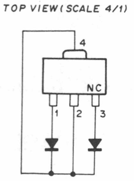
TOP VIEW (SCALE 4/1)
4
NC
1
2
3

EA30QS04-F

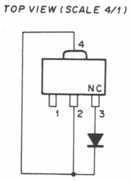
TOP VIEW (SCALE 4/1)
4
NC
1
2
3

EA60QC06-F

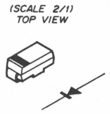
(SCALE 2/1)
TOP VIEW

EC10QS-06

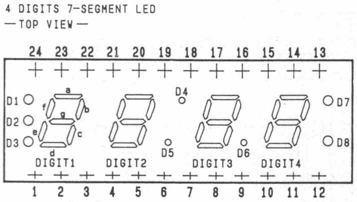
4 DIGITS 7-SEGMENT LED
—TOP VIEW—
24 23 22 21 20 19 18 17 16 15 14 13
D1
D2
D3
a
f
g
b
e
c
d
D4
D5
D6
D7
D8
DIGIT1
DIGIT2
DIGIT3
DIGIT4
1 2 3 4 5 6 7 8 9 10 11 12

LC-204MB ; GREEN

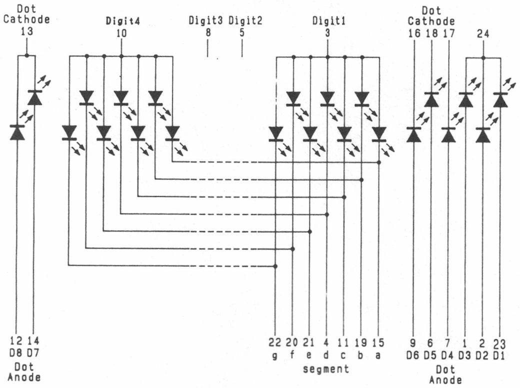
Dot Cathode 13
Digit4 10
Digit3 8
Digit2 5
Digit1 3
Dot Cathode 16 18 17
24
12 14
D8 D7
Dot Anode
22 20 21 4 11 19 15
g f e d c b a
segment
9 6 7 1 2 23
D6 D5 D4 D3 D2 D1
Dot Anode

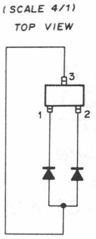
(SCALE 4/1)
TOP VIEW
3
1
2

MA141WA
MA141WK

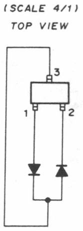
(SCALE 4/1)
TOP VIEW
3
1
2

MA143

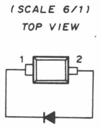
(SCALE 6/1)
TOP VIEW
1
2

MA728

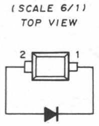
(SCALE 6/1)
TOP VIEW
2
1

MA8027-L

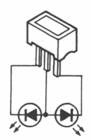

MU03-2201 ; RED

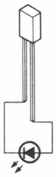

PG4553KY ; GREEN

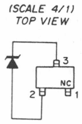
(SCALE 4/1)
TOP VIEW
3
NC
2
1

RD ? ?M
UZM ? ?X

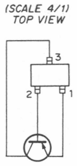
(SCALE 4/1)
TOP VIEW
3
2
1

2SA1610
2SA1611

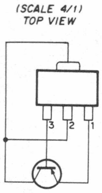
(SCALE 4/1)
TOP VIEW
3
2
1

2SB1114
2SB1121

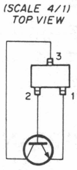
(SCALE 4/1)
TOP VIEW
3
2
1

2SC4176
2SC4177

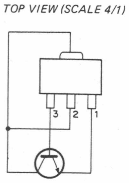
TOP VIEW (SCALE 4/1)
3
2
1

2SD1614
2SD1621

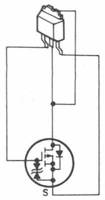

2SJ182S

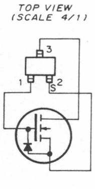
TOP VIEW
(SCALE 4/1)
3
1
2
S

2SK1374

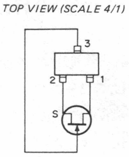
TOP VIEW (SCALE 4/1)
3
2
1
S

2SK209G

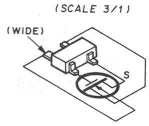
(SCALE 3/1)
(WIDE)
S

3SK163

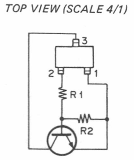
TOP VIEW (SCALE 4/1)
3
2
1
R1
R2

DTC114EU (R1 = 10K, R2 = 10K)

74ACT74SJ (NS) FLAT PACKAGE
SN74HC74ANS (TI) FLAT PACKAGE

C-MOS DUAL D-TYPE FLIP-FLOPS WITH DIRECT SET/RESET
– TOP VIEW –

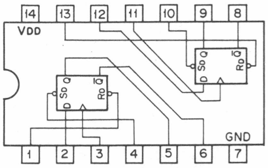
14
13
12
11
10
9
8
VDD
GND
1
2
3
4
5
6
7

INPUTS				OUTPUTS	
$\overline{\text{SD}}$	$\overline{\text{RD}}$	CK	D	Qn+1	$\overline{\text{Qn+1}}$
0	1	X	X	1	0
1	0	X	X	0	1
0	0	X	X	1	1
1	1	↑	1	1	0
1	1	↑	0	0	1
1	1	0	X	Qn	$\overline{\text{Q}}$n

0; LOW LEVEL
1; HIGH LEVEL
X; DON'T CARE

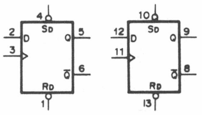
4
SD
2
D
3
5
Q
6
RD
1
10
SD
12
D
11
9
Q
8
RD
13

NOTE :

TYPE	VDD
TC74HCT74AF	+5V
TC74AC74 TYPE	+2 to +5.5V
74ACT74 TYPE	+4.5 to +5.5V
OTHER TYPES	+2 to +6V

AD7542JP (ANALOG DEVICES)

C-MOS 12-BIT D/A CONVERTER
– TOP VIEW –

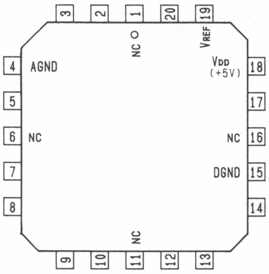
3
2
1
20
19
NC
VREF
4 AGND
VDD (+5V) 18
5
17
6 NC
NC 16
7
DGND 15
8
14
NC
9
10
11
12
13

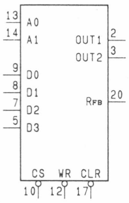
13 A0
14 A1
OUT1 2
OUT2 3
9 D0
8 D1
7 D2
5 D3
RFB 20
CS
WR
CLR
10
12
17

(VDD=+5V)

Pin No	I/O	SIGNAL	Pin No	I/O	SIGNAL
1	–	NC	11	–	NC
2	0	OUT1	12	I	WR
3	0	OUT2	13	I	A0
4	–	AGND	14	I	A1
5	I	D3(MSB)	15	–	DGND
6	–	NC	16	–	NC
7	I	D2	17	I	CLR
8	I	D1	18	–	VDD
9	I	D0(LSB)	19	–	VREF
10	I	CS	20	–	RFB

A0, A1 ;ADDRESS INPUTS
CLR ;REGISTER RESET
CS ;CHIP SELECT INPUT
D0–D3 ;DATA INPUTS
WR ;WRITE INPUT

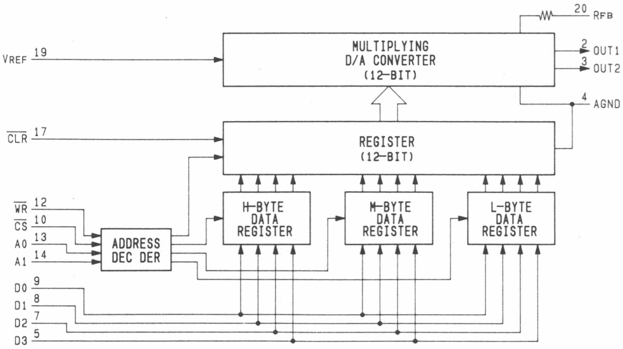
20 RFB
VREF 19
MULTIPLYING D/A CONVERTER (12-BIT)
2 OUT1
3 OUT2
4 AGND
CLR 17
REGISTER (12-BIT)
WR 12
CS 10
A0 13
A1 14
ADDRESS DEC DER
H-BYTE DATA REGISTER
M-BYTE DATA REGISTER
L-BYTE DATA REGISTER
D0 9
D1 8
D2 7
D3 5

AT27C512R-15JC (ATMEL)

C-MOS 512K (65536x8)-BIT UV-EPROM
– BOTTOM VIEW –

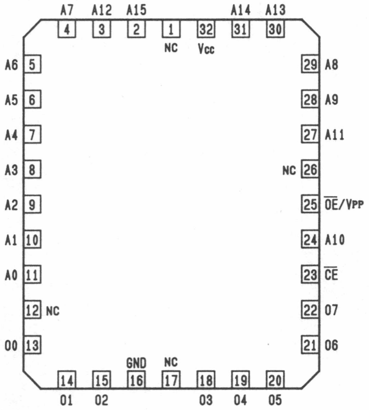
A7 4
A12 3
A15 2
1 NC
32 Vcc
A14 31
A13 30
A6 5
A5 6
A4 7
A3 8
A2 9
A1 10
A0 11
12 NC
O0 13
29 A8
28 A9
27 A11
NC 26
25 OE/VPP
24 A10
23 CE
22 O7
21 O6
14 O1
15 O2
16 GND
17 NC
18 O3
19 O4
20 O5

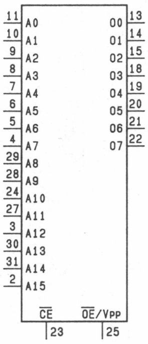
11 A0
10 A1
9 A2
8 A3
7 A4
6 A5
5 A6
4 A7
29 A8
28 A9
24 A10
27 A11
3 A12
30 A13
31 A14
2 A15
O0 13
O1 14
O2 15
O3 18
O4 19
O5 20
O6 21
O7 22
CE 23
OE/VPP 25

INPUT
A0–A15 ; ADDRESS BUS
$\overline{\text{CE}}$; CHIP ENABLE
$\overline{\text{OE}}$/VPP ; OUTPUT ENABLE

OUTPUT
O0–O7 ; DATA BUS

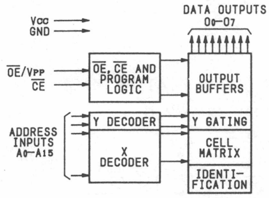
DATA OUTPUTS O0–O7
Vcc
GND
OE/VPP
CE
OE, CE AND PROGRAM LOGIC
OUTPUT BUFFERS
ADDRESS INPUTS A0–A15
Y DECODER
Y GATING
X DECODER
CELL MATRIX
IDENTI-FICATION

CLC505AJE (COMLINEAR) FLAT PACKAGE

OPERATIONAL AMPLIFIER
– TOP VIEW –

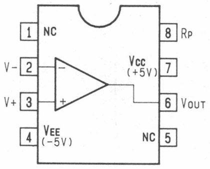
1 NC
2 V−
3 V+
4 VEE (−5V)
5 NC
6 VOUT
7 Vcc (+5V)
8 RP

CXA1297M (SONY) FLAT PACKAGE

OPERATIONAL AMPLIFIER
– TOP VIEW –

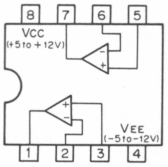
8 7 6 5
VCC (+5 to +12V)
VEE (−5 to −12V)
1 2 3 4

CXA1432M (SONY) FLAT PACKAGE

VIDEO SIGNAL CLAMPER
– TOP VIEW –

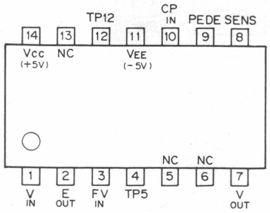
TP12
CP IN
PEDE
SENS
14 13 12 11 10 9 8
Vcc (+5V)
NC
VEE (−5V)
NC
NC
1 2 3 4 5 6 7
V IN
E OUT
FV IN
TP5
V OUT

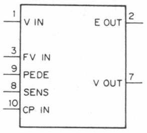
1 V IN
3 FV IN
9 PEDE
8 SENS
10 CP IN
2 E OUT
7 V OUT

CP IN ; CLAMP PULSE INPUT
E OUT ; BUFFER AMP OUTPUT
FV IN ; FLOATING VIDEO SIGNAL INPUT
PEDE ; CLAMP LEVEL DC INPUT
SENS ; CLAMP POINT SIGNAL INPUT
TP5, TP12 ; FOR TEST
V IN ; VIDEO SIGNAL INPUT
V OUT ; VIDEO SIGNAL OUTPUT

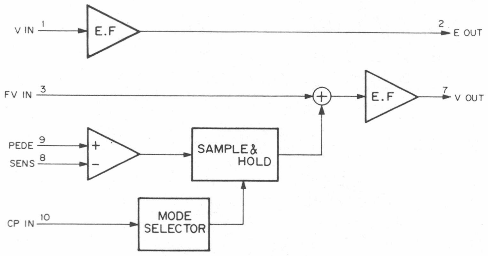
V IN 1
E.F
2 E OUT
FV IN 3
E.F
7 V OUT
PEDE 9
SENS 8
+
−
SAMPLE & HOLD
CP IN 10
MODE SELECTOR

CXA1450M (SONY) FLAT PACKAGE

VIDEO SIGNAL SWITCH
– TOP VIEW –

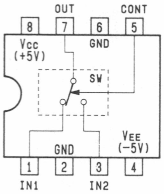
OUT
CONT
8 7 6 5
Vcc (+5V)
GND
SW
GND
VEE (−5V)
1 2 3 4
IN1
IN2

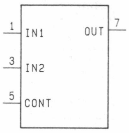
1 IN1
3 IN2
5 CONT
OUT 7

CXA1451M (SONY)

WIDEBAND VIDEO SWITCH
– TOP VIEW –

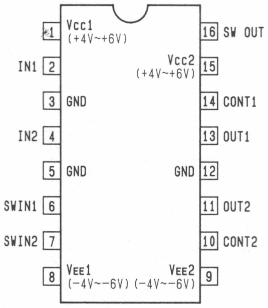
1 Vcc1 (+4V~+6V)
IN1 2
3 GND
IN2 4
5 GND
SWIN1 6
SWIN2 7
8 VEE1 (−4V~−6V)
16 SW OUT
15 Vcc2 (+4V~+6V)
14 CONT1
13 OUT1
12 GND
11 OUT2
10 CONT2
9 VEE2 (−4V~−6V)

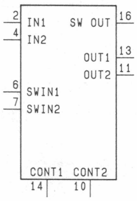
2 IN1
4 IN2
6 SWIN1
7 SWIN2
SW OUT 16
OUT1 13
OUT2 11
CONT1 14
CONT2 10

INPUT
CONT1, 2 ; POWER SAVE CONTROL PIN OF DRV.1 AND DRV.2
INT1, 2 ; 1/2-CHANNEL INPUT PIN
SWIN1, 2 ; IN1/IN2 PINS SWITCH CONTROL PIN

OUTPUT
OUT1, 2 ; OUTPUT PIN OF DRV.1/2
SWOUT ; OUTPUTS IN1 PIN OR IN2 PIN WHICH HAS BEEN SELECTED BY SWITCH.

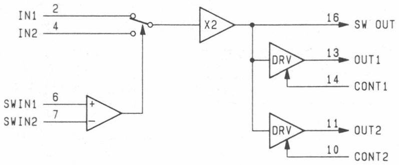
IN1 2
IN2 4
X2
16 SW OUT
DRV
13 OUT1
14 CONT1
SWIN1 6
SWIN2 7
DRV
11 OUT2
10 CONT2

CXD1177Q (SONY)

C-MOS Y/C 2 CHANNEL D/A CONVERTER

– TOP VIEW –

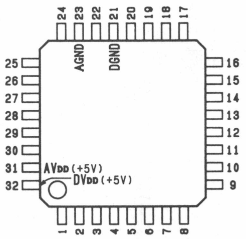
AGND
DGND
AVDD (+5V)
DVDD (+5V)
1 2 3 4 5 6 7 8 9 10 11 12 13 14 15 16 17 18 19 20 21 22 23 24 25 26 27 28 29 30 31 32

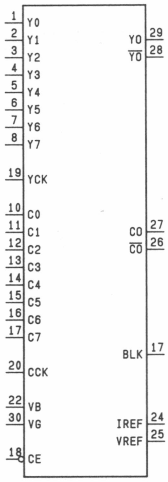
Y0
Y1
Y2
Y3
Y4
Y5
Y6
Y7
YCK
C0
C1
C2
C3
C4
C5
C6
C7
CCK
VB
VG
CE
Y0
$\overline{\text{Y0}}$
C0
$\overline{\text{C0}}$
BLK
IREF
VREF

PIN No.	I/O	SIGNAL	PIN No.	I/O	SIGNAL
1	I	Y0	17	O	BLK
2	I	Y1	18	I	$\overline{\text{CE}}$
3	I	Y2	19	I	YCK
4	I	Y3	20	I	CCK
5	I	Y4	21	–	DGND
6	I	Y5	22	I	VB
7	I	Y6	23	–	AGND
8	I	Y7	24	O	IREF
9	I	C0	25	O	VREF
10	I	C1	26	O	$\overline{\text{CO}}$
11	I	C2	27	O	CO
12	I	C3	28	O	$\overline{\text{YO}}$
13	I	C4	29	O	YO
14	I	C5	30	I	VG
15	I	C6	31	–	AVDD
16	I	C7	32	–	DVDD

INPUT
C0 – C7 ; C DATA
$\overline{\text{CCK}}$; CHROMA CLOCK
$\overline{\text{CE}}$; CHIP ENABLE
VB ; BIAS VOLTAGE
VG ; GND VOLTAGE
Y0 – Y7 ; Y DATA
YCK ; LUMINANCE CLOCK

OUTPUT
BLK ; BLANKING PULSE
CO – $\overline{\text{CO}}$; C DATA
IREF ; CURRENT REFERENCE
VREF ; VOLTAGE REFERENCE
YO – $\overline{\text{YO}}$; Y DATA

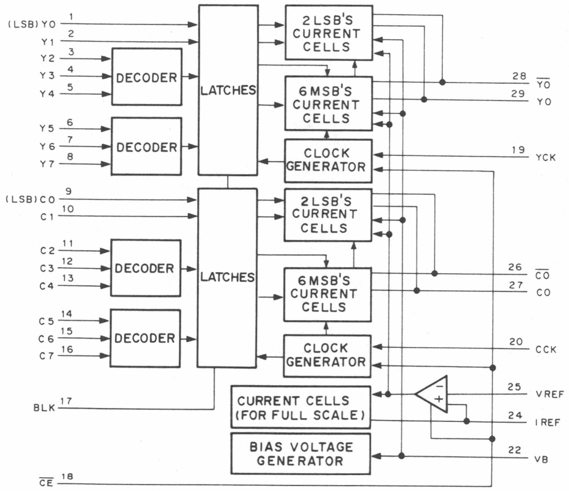
(LSB) Y0 1
Y1 2
Y2 3
Y3 4
Y4 5
Y5 6
Y6 7
Y7 8
(LSB) C0 9
C1 10
C2 11
C3 12
C4 13
C5 14
C6 15
C7 16
BLK 17
CE 18
DECODER
LATCHES
2 LSB'S CURRENT CELLS
6 MSB'S CURRENT CELLS
CLOCK GENERATOR
CURRENT CELLS (FOR FULL SCALE)
BIAS VOLTAGE GENERATOR
28 $\overline{\text{YO}}$
29 YO
19 YCK
26 $\overline{\text{CO}}$
27 CO
20 CCK
25 VREF
24 IREF
22 VB

CXD1179Q (SONY)

C-MOS VIDEO A/D CONVERTER

– TOP VIEW –

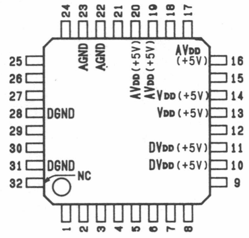
AGND
AGND
AVDD (+5V)
AVDD (+5V)
AVDD (+5V)
AVDD (+5V)
VDD (+5V)
DGND
DVDD (+5V)
DVDD (+5V)
DGND
NC
1 2 3 4 5 6 7 8 9 10 11 12 13 14 15 16 17 18 19 20 21 22 23 24 25 26 27 28 29 30 31 32

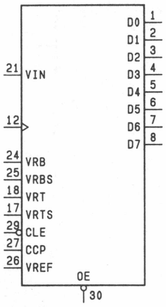
21 VIN
12
24 VRB
25 VRBS
18 VRT
17 VRTS
29 CLE
27 CCP
26 VREF
D0 1
D1 2
D2 3
D3 4
D4 5
D5 6
D6 7
D7 8
OE 30

PIN No.	I/O	SIGNAL	PIN No.	I/O	SIGNAL
1	O	D0 (LSB)	17	I	VRTS
2	O	D1	18	I	VRT
3	O	D2	19	–	AVDD
4	O	D3	20	–	AVDD
5	O	D4	21	I	VIN
6	O	D5	22	–	AGND
7	O	D6	23	–	AGND
8	O	D7	24	I	VRB
9	–	TEST (OPEN)	25	I	VRBS
10	–	DVDD	26	I	VREF
11	–	DVDD	27	I	CCP
12	I	CLK	28	–	DGND
13	–	VDD	29	I	$\overline{\text{CLE}}$
14	–	VDD	30	I	$\overline{\text{OE}}$
15	I	CLP	31	–	DGND
16	–	AVDD	32	–	NC

INPUT
$\overline{\text{CCP}}$; CLAMP CONTROL PULSE
$\overline{\text{CLE}}$; CLAMP ENABLE
CLK ; CLOCK
$\overline{\text{CLP}}$; CLAMP PULSE
$\overline{\text{OE}}$; OUTPUT ENABLE
VIN ; ANALOG VOLTAGE
VRB ; BOTTOM REFERENCE VOLTAGE
VRBS ; BOTTOM REFERENCE VOLTAGE SHORT (+0.5V)
VREF ; VOLTAGE REFERENCE
VRT ; TOP REFERENCE VOLTAGE
VRTS ; TOP REFERENCE VOLTAGE SHORT (+2.6V)

OUTPUT
D0 – D7 ; DATA

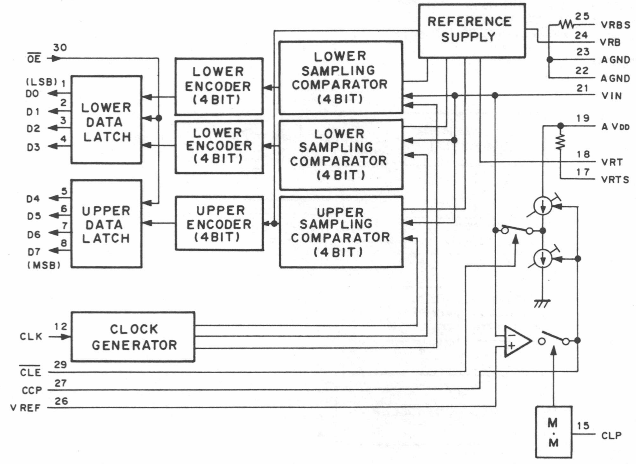
$\overline{\text{OE}}$ 30
(LSB) D0 1
D1 2
D2 3
D3 4
D4 5
D5 6
D6 7
D7 8 (MSB)
LOWER DATA LATCH
UPPER DATA LATCH
LOWER ENCODER (4BIT)
LOWER ENCODER (4BIT)
UPPER ENCODER (4BIT)
LOWER SAMPLING COMPARATOR (4BIT)
LOWER SAMPLING COMPARATOR (4BIT)
UPPER SAMPLING COMPARATOR (4BIT)
REFERENCE SUPPLY
CLOCK GENERATOR
CLK 12
$\overline{\text{CLE}}$ 29
CCP 27
VREF 26
25 VRBS
24 VRB
23 AGND
22 AGND
21 VIN
19 AVDD
18 VRT
17 VRTS
15 CLP
M M

CXK1202Q (SONY)

C-MOS DIGITAL DELAY LINE MEMORY
– TOP VIEW –

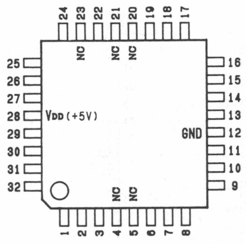
24 23 22 21 20 19 18 17
NC NC NC
25 26 27 28 29 30 31 32
VDD (+5V)
GND
16 15 14 13 12 11 10 9
NC NC
1 2 3 4 5 6 7 8

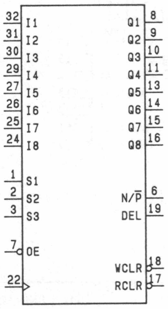
32 I1
31 I2
30 I3
29 I4
27 I5
26 I6
25 I7
24 I8
1 S1
2 S2
3 S3
7 OE
22
Q1 8
Q2 9
Q3 10
Q4 11
Q5 13
Q6 14
Q7 15
Q8 16
N/P 6
DEL 19
WCLR 18
RCLR 17

PIN No.	I/O	SIGNAL	PIN No.	I/O	SIGANL	PIN No.	I/O	SIGNAL	PIN No.	I/O	SIGNAL
1	I	S1	9	O	Q2	17	I	$\overline{\text{RCLR}}$	25	I	17
2	I	S2	10	O	Q3	18	I	$\overline{\text{WCLR}}$	26	I	16
3	I	S3	11	O	Q4	19	I	DEL	27	I	15
4	–	NC	12	–	GND	20	–	NC	28	–	VDD
5	–	NC	13	O	Q5	21	–	NC	29	I	14
6	I	NTSC/$\overline{\text{PAL}}$	14	O	Q6	22	I	CK	30	I	13
7	I	$\overline{\text{OE}}$	15	O	Q7	23	–	NC	31	I	12
8	O	Q1	16	O	Q8	24	I	18	32	I	11

NTSC MODE (N/P ; 1)

S1	S2	S3	DELAY AMOUNT
0	0	0	905
1	0	0	906
0	1	0	907
1	1	0	908
0	0	1	909
1	0	1	910
0	1	1	911
1	1	1	912

PAL MODE (N/P ; 0)

S1	S2	S3	DELAY AMOUNT
0	0	0	1129
1	0	0	1130
0	1	0	1131
1	1	0	1132
0	0	1	1133
1	0	1	1134
0	1	1	1135
1	1	1	1136

8nCLOCK CLEAR IN (n = 1, 2••• 141)

S1	S2	S3	DELAY AMOUNT
0	0	0	8 (n + 1) + 1
1	0	0	8 (n + 1) + 2
0	1	0	8 (n + 1) + 3
1	1	0	8 (n + 1) + 4
0	0	1	8 (n + 1) + 5
1	0	1	8 (n + 1) + 6
0	1	1	8 (n + 1) + 7
1	1	1	8 (n + 2)

0 : LOW LEVEL 1 : HIGH LEVEL

INPUT

CK ; CLOCK
DEL ; INT/EXT CLEAR SIGNAL SELECT
I1 – I8 ; DATA
N/$\overline{\text{P}}$; NTSC/PAL/SECAM SELECT
$\overline{\text{OE}}$; OUTPUT ENABLE
$\overline{\text{RCLR}}$; READ ADDRESS COUNTER
S1 – S3 ; DELAY AMOUNT
$\overline{\text{WCLR}}$; WRITE ADDRESS COUNTER

OUTPUT

Q1 – Q8 ; DATA

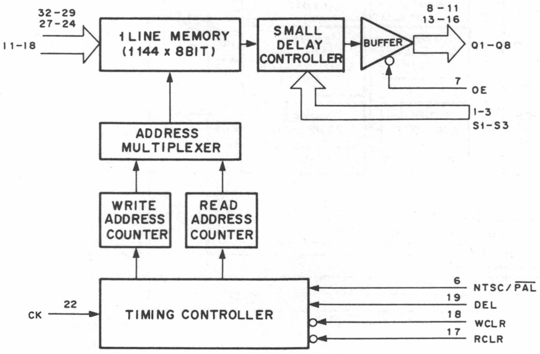
32-29
27-24
I1-I8
1 LINE MEMORY (1144 x 8BIT)
SMALL DELAY CONTROLLER
BUFFER
8-11
13-16
Q1-Q8
7
OE
1-3
S1-S3
ADDRESS MULTIPLEXER
WRITE ADDRESS COUNTER
READ ADDRESS COUNTER
TIMING CONTROLLER
22
CK
6 NTSC/PAL
19 DEL
18 WCLR
17 RCLR

EPM5128JC (ALTERA)

C-MOS UV ERASABLE PROGRAMMABLE LOGIC DEVICE
– TOP VIEW –

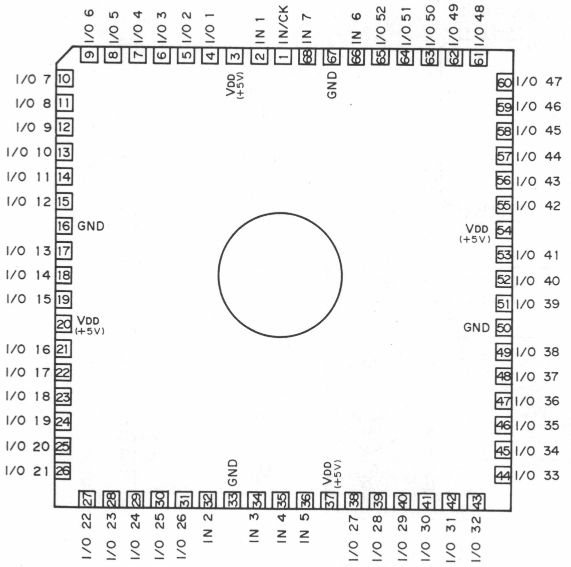
9 I/O 6
8 I/O 5
7 I/O 4
6 I/O 3
5 I/O 2
4 I/O 1
3 VDD (+5V)
2 IN 1
1 IN/CK
68 IN 7
67 GND
66 IN 6
65 I/O 52
64 I/O 51
63 I/O 50
62 I/O 49
61 I/O 48
I/O 7 10
I/O 8 11
I/O 9 12
I/O 10 13
I/O 11 14
I/O 12 15
16 GND
I/O 13 17
I/O 14 18
I/O 15 19
20 VDD (+5V)
I/O 16 21
I/O 17 22
I/O 18 23
I/O 19 24
I/O 20 25
I/O 21 26
60 I/O 47
59 I/O 46
58 I/O 45
57 I/O 44
56 I/O 43
55 I/O 42
54 VDD (+5V)
53 I/O 41
52 I/O 40
51 I/O 39
50 GND
49 I/O 38
48 I/O 37
47 I/O 36
46 I/O 35
45 I/O 34
44 I/O 33
27 I/O 22
28 I/O 23
29 I/O 24
30 I/O 25
31 I/O 26
32 IN 2
33 GND
34 IN 3
35 IN 4
36 IN 5
37 VDD (+5V)
38 I/O 27
39 I/O 28
40 I/O 29
41 I/O 30
42 I/O 31
43 I/O 32

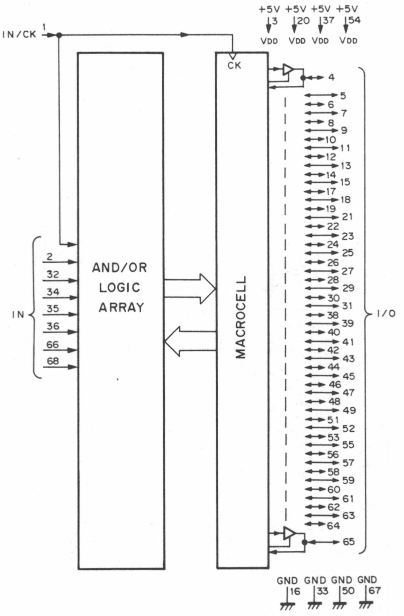
IN/CK 1
+5V +5V +5V +5V
3 20 37 54
VDD VDD VDD VDD
CK
IN
2
32
34
35
36
66
68
AND/OR LOGIC ARRAY
MACROCELL
4 5 6 7 8 9 10 11 12 13 14 15 17 18 19 21 22 23 24 25 26 27 28 29 30 31 38 39 40 41 42 43 44 45 46 47 48 49 51 52 53 55 56 57 58 59 60 61 62 63 64 65
I/O
GND GND GND GND
16 33 50 67

*ABOVE DIAGRAM SHOWS CONDITION BEFORE PROGRAMMING.

HD6475208CP (HITACHI)

C-MOS MICRO COMPUTER UNIT
– TOP VIEW –

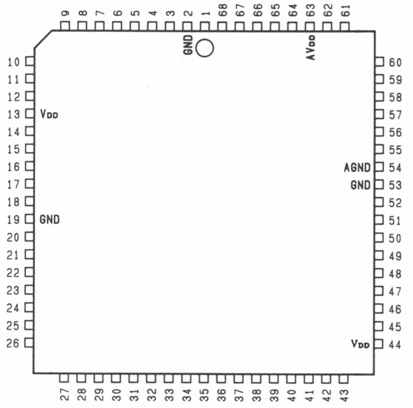
9 8 7 6 5 4 3 2 1 68 67 66 65 64 63 62 61
GND
AVDD
10 11 12 13 14 15 16 17 18 19 20 21 22 23 24 25 26
VDD
GND
60 59 58 57 56 55 54 53 52 51 50 49 48 47 46 45 44
AGND
GND
VDD
27 28 29 30 31 32 33 34 35 36 37 38 39 40 41 42 43

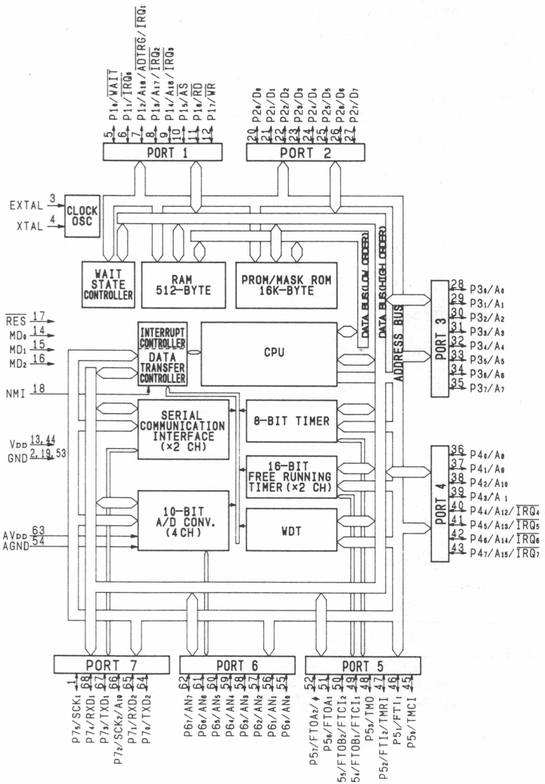
5 P10/WAIT
6 P11/IRQ0
7 P12/A18/ADTRG/IRQ1
8 P13/A17/IRQ2
9 P14/A16/IRQ3
10 P15/AS
11 P16/RD
12 P17/WR
PORT 1
20 P20/D0
21 P21/D1
22 P22/D2
23 P23/D3
24 P24/D4
25 P25/D5
26 P26/D6
27 P27/D7
PORT 2
EXTAL 3
XTAL 4
CLOCK OSC
WAIT STATE CONTROLLER
RAM 512-BYTE
PROM/MASK ROM 16K-BYTE
DATA BUS(LOW ORDER)
DATA BUS(HIGH ORDER)
ADDRESS BUS
RES 17
MD0 14
MD1 15
MD2 16
NMI 18
INTERRUPT CONTROLLER
DATA TRANSFER CONTROLLER
CPU
SERIAL COMMUNICATION INTERFACE (×2 CH)
8-BIT TIMER
16-BIT FREE RUNNING TIMER (×2 CH)
10-BIT A/D CONV. (4CH)
WDT
VDD 13,44
GND 2,19,53
AVDD 63
AGND 54
PORT 3
28 P30/A0
29 P31/A1
30 P32/A2
31 P33/A3
32 P34/A4
33 P35/A5
34 P36/A6
35 P37/A7
PORT 4
36 P40/A8
37 P41/A9
38 P42/A10
39 P43/A11
40 P44/A12/IRQ4
41 P45/A13/IRQ5
42 P46/A14/IRQ6
43 P47/A15/IRQ7
PORT 7
1 P75/SCK1
68 P74/RXD1
67 P73/TXD1
66 P72/SCK2/A19
65 P71/RXD2
64 P70/TXD2
PORT 6
62 P67/AN7
61 P66/AN6
60 P65/AN5
59 P64/AN4
58 P63/AN3
57 P62/AN2
56 P61/AN1
55 P60/AN0
PORT 5
52 P57/FTOA2/φ
51 P56/FTOA1
50 P55/FTOB2/FTCI2
49 P54/FTOB1/FTCI1
48 P53/TMO
47 P52/FTI2/TMRI
46 P51/FTI1
45 P50/TMCI

INPUTS			OPERATION MODE	CONTENTS
MD2	MD1	MD0		
0	0	1	MODE 1	EXTENSION MINIMUM MODE (ROM INVALID)
0	1	0	MODE 2	EXTENSION MINIMUM MODE (ROM VALID)
0	1	1	MODE 3	EXTENSION MAXIMUM MODE (ROM INVALID)
1	0	0	MODE 4	EXTENSION MAXIMUM MODE (ROM VALID)
1	1	1	MODE 7	SINGLE CHIP MODE

MODE 1

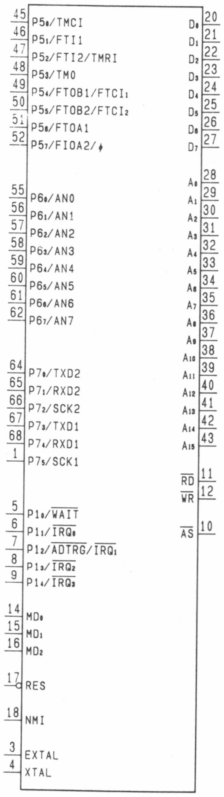
45 P50/TMCI
46 P51/FTI1
47 P52/FTI2/TMRI
48 P53/TMO
49 P54/FTOB1/FTCI1
50 P55/FTOB2/FTCI2
51 P56/FTOA1
52 P57/FIOA2/φ
55 P60/AN0
56 P61/AN1
57 P62/AN2
58 P63/AN3
59 P64/AN4
60 P65/AN5
61 P66/AN6
62 P67/AN7
64 P70/TXD2
65 P71/RXD2
66 P72/SCK2
67 P73/TXD1
68 P74/RXD1
1 P75/SCK1
5 P10/WAIT
6 P11/IRQ0
7 P12/ADTRG/IRQ1
8 P13/IRQ2
9 P14/IRQ3
14 MD0
15 MD1
16 MD2
17 RES
18 NMI
3 EXTAL
4 XTAL
D0 20
D1 21
D2 22
D3 23
D4 24
D5 25
D6 26
D7 27
A0 28
A1 29
A2 30
A3 31
A4 32
A5 33
A6 34
A7 35
A8 36
A9 37
A10 38
A11 39
A12 40
A13 41
A14 42
A15 43
RD 11
WR 12
AS 10

MODE 2

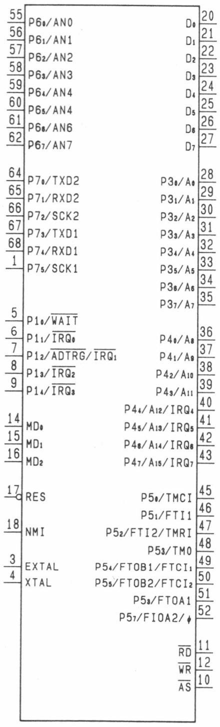
55 P60/AN0
56 P61/AN1
57 P62/AN2
58 P63/AN3
59 P64/AN4
60 P65/AN5
61 P66/AN6
62 P67/AN7
64 P70/TXD2
65 P71/RXD2
66 P72/SCK2
67 P73/TXD1
68 P74/RXD1
1 P75/SCK1
5 P10/WAIT
6 P11/IRQ0
7 P12/ADTRG/IRQ1
8 P13/IRQ2
9 P14/IRQ3
14 MD0
15 MD1
16 MD2
17 RES
18 NMI
3 EXTAL
4 XTAL
D0 20
D1 21
D2 22
D3 23
D4 24
D5 25
D6 26
D7 27
P30/A0 28
P31/A1 29
P32/A2 30
P33/A3 31
P34/A4 32
P35/A5 33
P36/A6 34
P37/A7 35
P40/A8 36
P41/A9 37
P42/A10 38
P43/A11 39
P44/A12/IRQ4 40
P45/A13/IRQ5 41
P46/A14/IRQ6 42
P47/A15/IRQ7 43
P50/TMCI 45
P51/FTI1 46
P52/FTI2/TMRI 47
P53/TMO 48
P54/FTOB1/FTCI1 49
P55/FTOB2/FTCI2 50
P56/FTOA1 51
P57/FIOA2/φ 52
RD 11
WR 12
AS 10

MODE 3

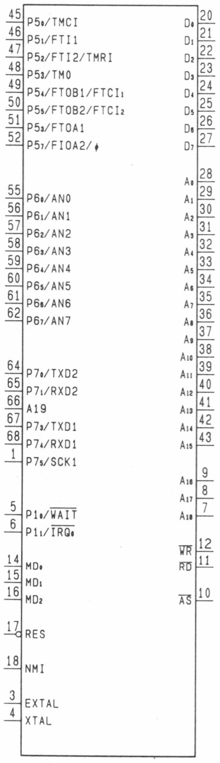
45 P50/TMCI
46 P51/FTI1
47 P52/FTI2/TMRI
48 P53/TMO
49 P54/FTOB1/FTCI1
50 P55/FTOB2/FTCI2
51 P56/FTOA1
52 P57/FIOA2/φ
55 P60/AN0
56 P61/AN1
57 P62/AN2
58 P63/AN3
59 P64/AN4
60 P65/AN5
61 P66/AN6
62 P67/AN7
64 P70/TXD2
65 P71/RXD2
66 A19
67 P73/TXD1
68 P74/RXD1
1 P75/SCK1
5 P10/WAIT
6 P11/IRQ0
14 MD0
15 MD1
16 MD2
17 RES
18 NMI
3 EXTAL
4 XTAL
D0 20
D1 21
D2 22
D3 23
D4 24
D5 25
D6 26
D7 27
A0 28
A1 29
A2 30
A3 31
A4 32
A5 33
A6 34
A7 35
A8 36
A9 37
A10 38
A11 39
A12 40
A13 41
A14 42
A15 43
A16 9
A17 8
A18 7
WR 12
RD 11
AS 10

MODE 4

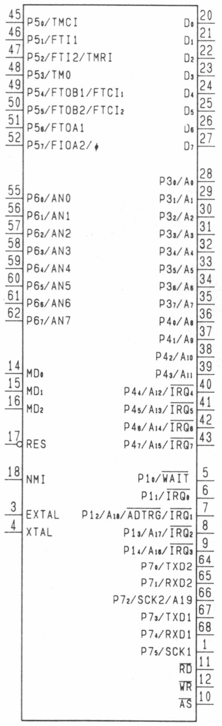
45 P50/TMCI
46 P51/FTI1
47 P52/FTI2/TMRI
48 P53/TMO
49 P54/FTOB1/FTCI1
50 P55/FTOB2/FTCI2
51 P56/FTOA1
52 P57/FIOA2/φ
55 P60/AN0
56 P61/AN1
57 P62/AN2
58 P63/AN3
59 P64/AN4
60 P65/AN5
61 P66/AN6
62 P67/AN7
14 MD0
15 MD1
16 MD2
17 RES
18 NMI
3 EXTAL
4 XTAL
D0 20
D1 21
D2 22
D3 23
D4 24
D5 25
D6 26
D7 27
P30/A0 28
P31/A1 29
P32/A2 30
P33/A3 31
P34/A4 32
P35/A5 33
P36/A6 34
P37/A7 35
P40/A8 36
P41/A9 37
P42/A10 38
P43/A11 39
P44/A12/IRQ4 40
P45/A13/IRQ5 41
P46/A14/IRQ6 42
P47/A15/IRQ7 43
P10/WAIT 5
P11/IRQ0 6
P12/A18/ADTRG/IRQ1 7
P13/A17/IRQ2 8
P14/A16/IRQ3 9
P70/TXD2 64
P71/RXD2 65
P72/SCK2/A19 66
P73/TXD1 67
P74/RXD1 68
P75/SCK1 1
RD 11
WR 12
AS 10

MODE 7

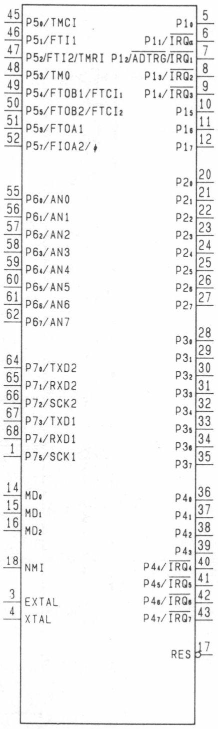
45 P50/TMCI
46 P51/FTI1
47 P52/FTI2/TMRI
48 P53/TMO
49 P54/FTOB1/FTCI1
50 P55/FTOB2/FTCI2
51 P56/FTOA1
52 P57/FIOA2/φ
55 P60/AN0
56 P61/AN1
57 P62/AN2
58 P63/AN3
59 P64/AN4
60 P65/AN5
61 P66/AN6
62 P67/AN7
64 P70/TXD2
65 P71/RXD2
66 P72/SCK2
67 P73/TXD1
68 P74/RXD1
1 P75/SCK1
14 MD0
15 MD1
16 MD2
18 NMI
3 EXTAL
4 XTAL
P10 5
P11/IRQ0 6
P12/ADTRG/IRQ1 7
P13/IRQ2 8
P14/IRQ3 9
P15 10
P16 11
P17 12
P20 20
P21 21
P22 22
P23 23
P24 24
P25 25
P26 26
P27 27
P30 28
P31 29
P32 30
P33 31
P34 32
P35 33
P36 34
P37 35
P40 36
P41 37
P42 38
P43 39
P44/IRQ4 40
P45/IRQ5 41
P46/IRQ6 42
P47/IRQ7 43
RES 17

HM6264ALFP-10 (HITACHI) (ACCESS TIME = 100nS)

C-MOS 64K (8192x8)-BIT STATIC RAM

– TOP VIEW –

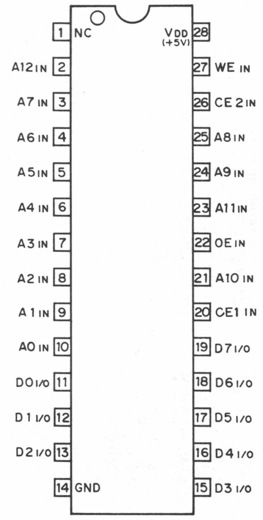
1 NC
2 A12 IN
3 A7 IN
4 A6 IN
5 A5 IN
6 A4 IN
7 A3 IN
8 A2 IN
9 A1 IN
10 A0 IN
11 D0 I/O
12 D1 I/O
13 D2 I/O
14 GND
15 D3 I/O
16 D4 I/O
17 D5 I/O
18 D6 I/O
19 D7 I/O
20 CE1 IN
21 A10 IN
22 OE IN
23 A11 IN
24 A9 IN
25 A8 IN
26 CE2 IN
27 WE IN
28 VDD (+5V)

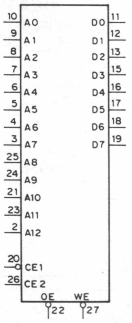
10 A0
9 A1
8 A2
7 A3
6 A4
5 A5
4 A6
3 A7
25 A8
24 A9
21 A10
23 A11
2 A12
20 CE1
26 CE2
OE 22
WE 27
D0 11
D1 12
D2 13
D3 15
D4 16
D5 17
D6 18
D7 19

A0–A12 ; ADDRESS INPUTS
CE1, CE2 ; CHIP ENABLE 1, 2 INPUTS
D0–D7 ; DATA INPUTS/OUTPUTS
OE ; OUTPUT ENABLE INPUT
WE ; WRITE ENABLE INPUT

MODE SELECTION

CONTROL INPUTS				MODE
CE1	CE2	OE	WE	
1	X	X	X	NO CHANGE
X	0	X	X	NO CHANGE
0	1	1	1	DISABLE OUTPUT
0	1	0	1	READ
0	1	X	0	WRITE

0 ; LOW LEVEL
1 ; HIGH LEVEL
X ; DON'T CARE

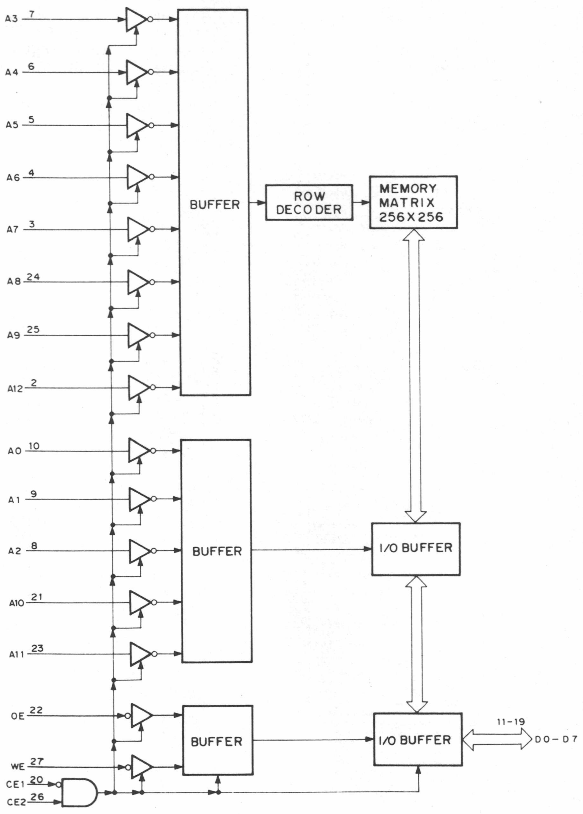
A3 7
A4 6
A5 5
A6 4
A7 3
A8 24
A9 25
A12 2
A0 10
A1 9
A2 8
A10 21
A11 23
OE 22
WE 27
CE1 20
CE2 26
BUFFER
ROW DECODER
MEMORY MATRIX 256X256
BUFFER
I/O BUFFER
BUFFER
I/O BUFFER
11–19
D0 – D7

HN58C66FP-25 (HITACHI)

C-MOS 64K (8192x8)-BIT EEPROM

– TOP VIEW –

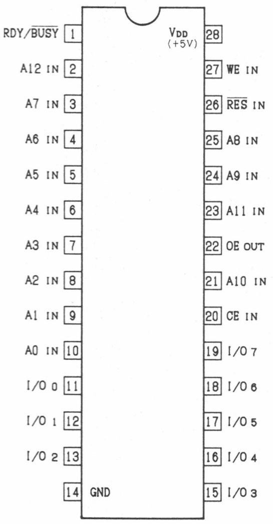
RDY/BUSY 1
A12 IN 2
A7 IN 3
A6 IN 4
A5 IN 5
A4 IN 6
A3 IN 7
A2 IN 8
A1 IN 9
A0 IN 10
I/O 0 11
I/O 1 12
I/O 2 13
14 GND
15 I/O 3
16 I/O 4
17 I/O 5
18 I/O 6
19 I/O 7
20 CE IN
21 A10 IN
22 OE OUT
23 A11 IN
24 A9 IN
25 A8 IN
26 RES IN
27 WE IN
28 VDD (+5V)

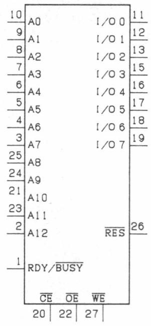
10 A0
9 A1
8 A2
7 A3
6 A4
5 A5
4 A6
3 A7
25 A8
24 A9
21 A10
23 A11
2 A12
1 RDY/BUSY
I/O 0 11
I/O 1 12
I/O 2 13
I/O 3 15
I/O 4 16
I/O 5 17
I/O 6 18
I/O 7 19
RES 26
CE 20
OE 22
WE 27

A0–A12 ; ADDRESS INPUTS
$\overline{\text{CE}}$; CHIP ENABLE INPUT
I/O0–I/O7 ; DATA INPUTS/OUTPUTS
$\overline{\text{OE}}$; OUTPUT ENABLE
RDY/$\overline{\text{BUSY}}$; READY/$\overline{\text{BUSY}}$ OUTPUT
$\overline{\text{WE}}$; WRITE ENABLE INPUT
$\overline{\text{RES}}$; PROGRAM RESET INPUT

$\overline{\text{CE}}$	$\overline{\text{OE}}$	$\overline{\text{WE}}$	RDY/$\overline{\text{BUSY}}$	RES	I/O TERMINAL	FUNCTION
0	0	1	HI-Z	1	DOUT	READ
1	X	X	HI-Z	X	HI-Z	STANDBY
0	1	0	HI-Z→LOW	1	DIN	WRITE
0	1	1	HI-Z	1	HI-Z	DESELECT
X	X	1	HI-Z	X	-	WRITE INH
X	0	X	HI-Z	X	-	WRITE INH
0	0	1	LOW	1	DATA OUT(I/O7)	DATA POLLING
X	X	X	HI-Z	0	HI-Z	PROGRAM RESET

0;LOW LEVEL
1;HIGH LEVEL
X;DON'T CARE
HI-Z;HIGH IMPEDANCE

M62352GP (MITSUBISHI) FLAT PACKAGE

C-MOS 8-BITx12 CHANNEL D/A CONVERTER
(WITH BUFFER OPERATIONAL AMPLIFIER)
– TOP VIEW –

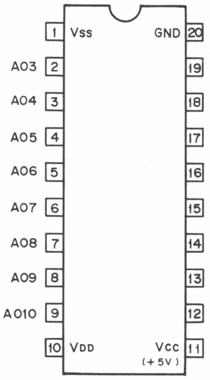
1 Vss
2 AO3
3 AO4
4 AO5
5 AO6
6 AO7
7 AO8
8 AO9
9 AO10
10 VDD
11 Vcc (+5V)
12 AO11
13 AO12
14 DO
15 LD
16 CK
17 DI
18 AO1
19 AO2
20 GND

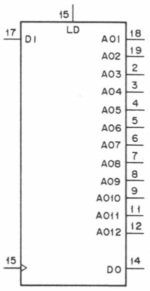
15
LD
17
DI
AO1 18
AO2 19
AO3 2
AO4 3
AO5 4
AO6 5
AO7 6
AO8 7
AO9 8
AO10 9
AO11 11
AO12 12
15
DO 14

AO1 – AO12 ; 8-BIT D/A OUTPUT
CK ; CLOCK INPUT
DI ; SERIAL DATA INPUT
DO ; DATA OUTPUT

NOTE :
$3.5V < V_{DD} < V_{CC}$
$-3.5V < V_{SS} < V_{CC}$

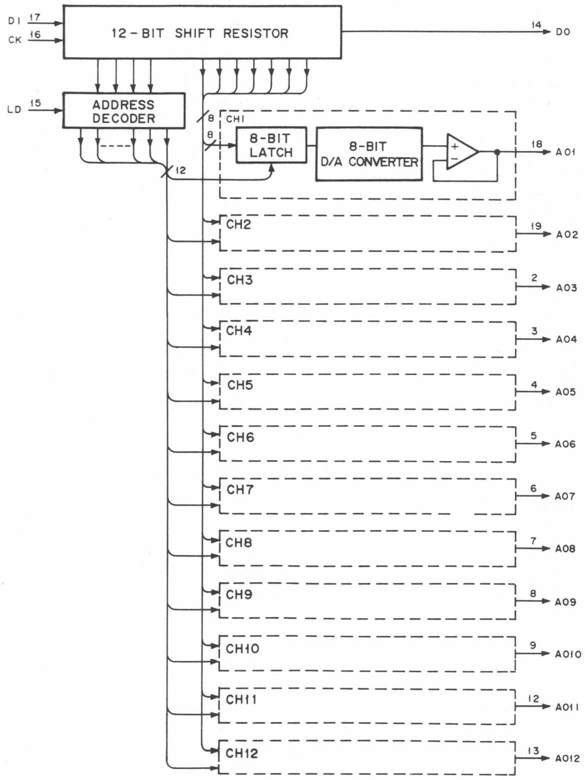
DI 17
CK 16
12-BIT SHIFT RESISTOR
14 DO
LD 15
ADDRESS DECODER
8
8
CH1
8-BIT LATCH
8-BIT D/A CONVERTER
+
−
18 AO1
12
CH2 19 AO2
CH3 2 AO3
CH4 3 AO4
CH5 4 AO5
CH6 5 AO6
CH7 6 AO7
CH8 7 AO8
CH9 8 AO9
CH10 9 AO10
CH11 12 AO11
CH12 13 AO12

MC14046BF (MOTOROLA) FLAT PACKAGE

C-MOS PHASE LOCKED LOOP
– TOP VIEW –

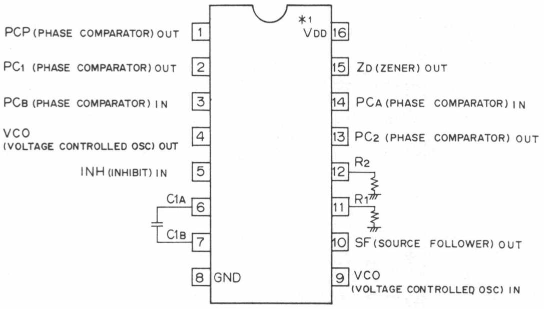
PCP (PHASE COMPARATOR) OUT 1
PC1 (PHASE COMPARATOR) OUT 2
PCB (PHASE COMPARATOR) IN 3
VCO (VOLTAGE CONTROLLED OSC) OUT 4
INH (INHIBIT) IN 5
C1A 6
C1B 7
8 GND
*1 VDD 16
15 ZD (ZENER) OUT
14 PCA (PHASE COMPARATOR) IN
13 PC2 (PHASE COMPARATOR) OUT
12 R2
11 R1
10 SF (SOURCE FOLLOWER) OUT
9 VCO (VOLTAGE CONTROLLED OSC) IN

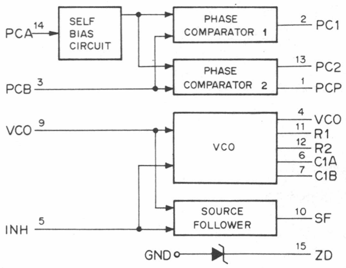
PCA 14
SELF BIAS CIRCUIT
PHASE COMPARATOR 1
2 PC1
PHASE COMPARATOR 2
13 PC2
1 PCP
PCB 3
VCO 9
VCO
4 VCO
11 R1
12 R2
6 C1A
7 C1B
INH 5
SOURCE FOLLOWER
10 SF
GND
15 ZD

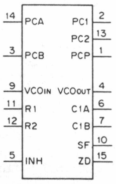
14 PCA
3 PCB
9 VCOIN
11 R1
12 R2
5 INH
PC1 2
PC2 13
PCP 1
VCOOUT 4
C1A 6
C1B 7
SF 10
ZD 15

*1

TYPE	VDD
CD4046BE HD14046BP MC14046BCP MC14046BF TC4046BP	+3 to +8V
MC74HC4046AN	+2 to +6V

MC14051BF (MOTOROLA) FLAT PACKAGE

C-MOS 8-CHANNEL ANALOG MULTIPLEXER/DEMULTIPLEXER
– TOP VIEW –

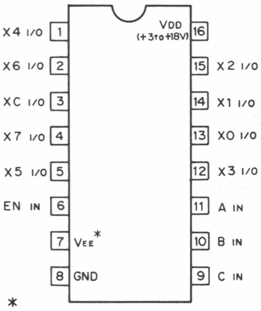
X4 I/O 1
X6 I/O 2
XC I/O 3
X7 I/O 4
X5 I/O 5
EN IN 6
7 VEE*
8 GND
VDD (+3 to +18V) 16
15 X2 I/O
14 X1 I/O
13 X0 I/O
12 X3 I/O
11 A IN
10 B IN
9 C IN

* VEE ; $V_{DD} - V_{EE} = +3$ to $+18V$

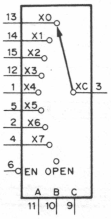
13 X0
14 X1
15 X2
12 X3
1 X4
5 X5
2 X6
4 X7
XC 3
6 EN OPEN
A B C
11 10 9

CONTROL INPUTS				SELECTED CHANNEL
EN	SELECT			
	C	B	A	
0	0	0	0	X0
0	0	0	1	X1
0	0	1	0	X2
0	0	1	1	X3
0	1	0	0	X4
0	1	0	1	X5
0	1	1	0	X6
0	1	1	1	X7
1	X	X	X	OPEN

0; LOW LEVEL
1; HIGH LEVEL
X; DON'T CARE

X0 to X7; ANALOG INPUTS/OUTPUTS
XC; COMMON INPUT/OUTPUT
A,B,C; CHANNEL SELECT INPUT
EN; ENABLE INPUT

HD14053BFP (HITACHI) FLAT PACKAGE
MC14053BF (MOTOROLA) FLAT PACKAGE

C-MOS TRIPLE 2-CHANNEL ANALOG MULTIPLEXERS/DEMULTIPLEXERS
– TOP VIEW –

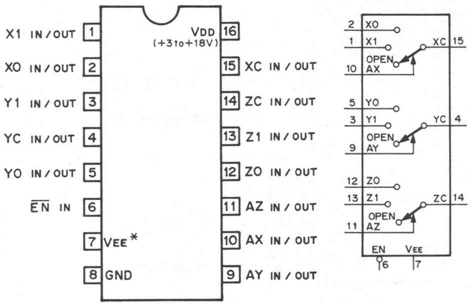
X1 IN / OUT 1
X0 IN / OUT 2
Y1 IN / OUT 3
YC IN / OUT 4
Y0 IN / OUT 5
EN IN 6
7 VEE*
8 GND
VDD (+3 to +18V) 16
15 XC IN / OUT
14 ZC IN / OUT
13 Z1 IN / OUT
12 Z0 IN / OUT
11 AZ IN / OUT
10 AX IN / OUT
9 AY IN / OUT
X0 X1 OPEN AX XC
Y0 Y1 OPEN AY YC
Z0 Z1 OPEN AZ ZC
EN VEE

VEE*; VDD − VEE = +3 to +18 V

CONT. INPUTS		ON CHANNEL
EN	A (X,Y,Z,)	
0	0	0
0	1	1
1	X	OPEN

0; LOW LEVEL
1; HIGH LEVEL
X; DON'T CARE.

MC14490F (MOTOROLA) FLAT PACKAGE

C-MOS HEX CONTACT BOUNCE ELIMINATOR
– TOP VIEW –

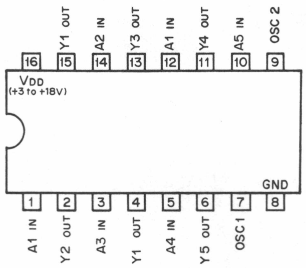
16 15 Y1 OUT 14 A2 IN 13 Y3 OUT 12 A1 IN 11 Y4 OUT 10 A5 IN 9 OSC 2
VDD (+3 to +18V)
GND
1 A1 IN 2 Y2 OUT 3 A3 IN 4 Y1 OUT 5 A4 IN 6 Y5 OUT 7 OSC1 8

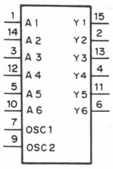
A1 A2 A3 A4 A5 A6 OSC1 OSC2
Y1 Y2 Y3 Y4 Y5 Y6

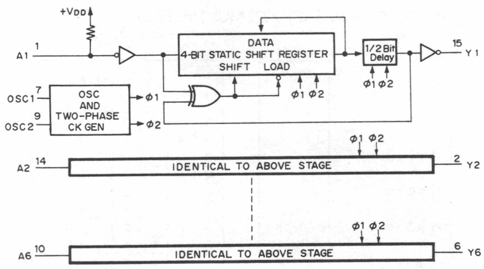
+VDD
A1
DATA
4-BIT STATIC SHIFT REGISTER
SHIFT LOAD
1/2 Bit Delay
φ1 φ2
Y1
OSC1
OSC2
OSC AND TWO-PHASE CK GEN
φ1
φ2
A2
IDENTICAL TO ABOVE STAGE
Y2
A6
IDENTICAL TO ABOVE STAGE
Y6

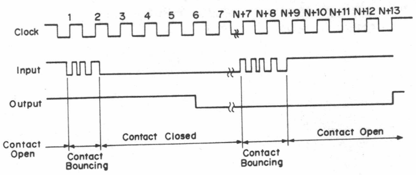
Clock
1 2 3 4 5 6 7 N+7 N+8 N+9 N+10 N+11 N+12 N+13
Input
Output
Contact Open
Contact Bouncing
Contact Closed
Contact Bouncing
Contact Open

MC1495M (MOTOROLA) FLAT PACKAGE

FOUR-QUADRANT MULTIPLIER
– TOP VIEW –

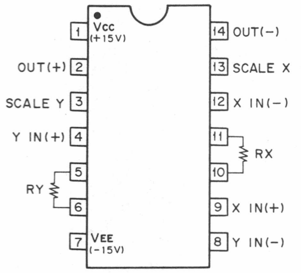
1 Vcc (+15V)
OUT(+) 2
SCALE Y 3
Y IN(+) 4
RY 5 6
7 VEE (−15V)
14 OUT(−)
13 SCALE X
12 X IN(−)
11 10 RX
9 X IN(+)
8 Y IN(−)

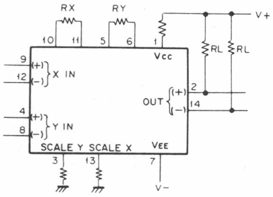
RX RY V+
RL RL
X IN
Y IN
Vcc
OUT
SCALE Y SCALE X VEE
V−

MC74ACT08M (MOTOROLA) FLAT PACKAGE

C-MOS QUAD 2-INPUT AND GATES
– TOP VIEW –

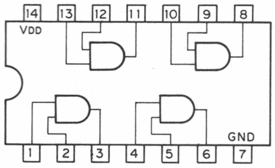
14 13 12 11 10 9 8
VDD
GND
1 2 3 4 5 6 7

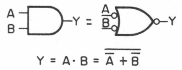

$Y = A \cdot B = \overline{\overline{A} + \overline{B}}$

A	B	Y
0	0	0
0	1	0
1	0	0
1	1	1

0; LOW LEVEL
1; HIGH LEVEL

NOTE :

TYPE	VDD
TC74AC08F MC74ACT08M	+2 to +5.5V
OTHER TYPES	+2 to +6V

NJM386BM (JRC) FLAT PACKAGE

AUDIO POWER AMPLIFIER
– TOP VIEW –

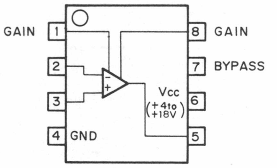
GAIN 1
2
3
4 GND
8 GAIN
7 BYPASS
6 Vcc (+4 to +18V)
5

OP-07CPS (TI) FLAT PACKAGE

OPERATIONAL AMPLIFIER
– TOP VIEW –

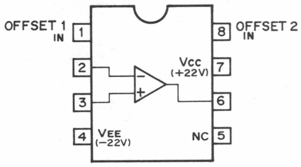
OFFSET 1 IN 1
2
3
4 VEE (−22V)
8 OFFSET 2 IN
7 Vcc (+22V)
6
NC 5

PCF8574AT (PHILIPS)
PCF8574T (PHILIPS)

C-MOS REMOTE 8-BIT I/O EXPANDER
– TOP VIEW –

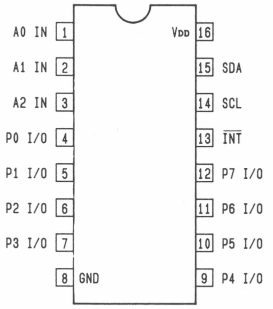
A0 IN 1
A1 IN 2
A2 IN 3
P0 I/O 4
P1 I/O 5
P2 I/O 6
P3 I/O 7
8 GND
VDD 16
15 SDA
14 SCL
13 INT
12 P7 I/O
11 P6 I/O
10 P5 I/O
9 P4 I/O

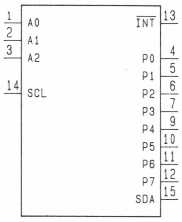
1 A0
2 A1
3 A2
14 SCL
INT 13
P0 4
P1 5
P2 6
P3 7
P4 9
P5 10
P6 11
P7 12
SDA 15

INPUT
A0–A2 ; ADDRESS INPUT
SCL ; SYSTEM CLOCK LINE

OUTPUT
$\overline{INT}$; INTERRUPT OUTPUT
SDA ; SERIAL DATA LINE

INPUT/OUTPUT
P0–P7 ; 8 BITS QUASI-BIDIRECTIONAL I/O PORT

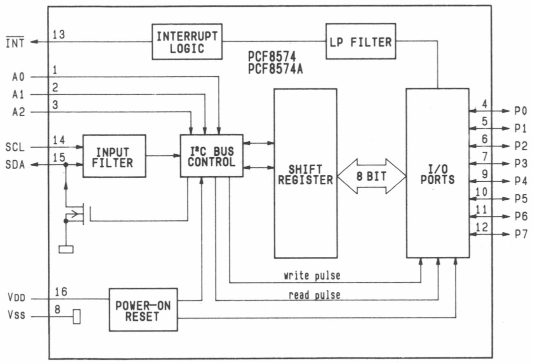
INT
13
INTERRUPT LOGIC
LP FILTER
PCF8574
PCF8574A
A0
A1
A2
1
2
3
SCL
SDA
14
15
INPUT FILTER
I²C BUS CONTROL
SHIFT REGISTER
8 BIT
I/O PORTS
4 P0
5 P1
6 P2
7 P3
9 P4
10 P5
11 P6
12 P7
write pulse
read pulse
VDD 16
Vss 8
POWER-ON RESET

NJM1496M (MOTOROLA) FLAT PACKAGE
RC1496M (RAYTHEON) FLAT PACKAGE

BALANCED MODULATOR/DEMODULATOR
– TOP VIEW –

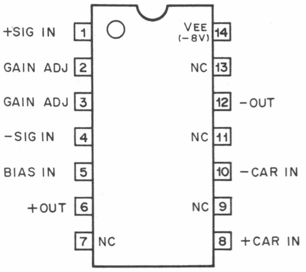
+SIG IN 1
GAIN ADJ 2
GAIN ADJ 3
–SIG IN 4
BIAS IN 5
+OUT 6
7 NC
VEE (–8V) 14
NC 13
12 –OUT
NC 11
10 –CAR IN
NC 9
8 +CAR IN

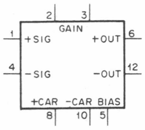
2
3
GAIN
1 +SIG
+OUT 6
4 –SIG
–OUT 12
+CAR –CAR BIAS
8 10 5

NJM4556M-A (JRC) FLAT PACKAGE
RC4556MA (RAYTHEON) FLAT PACKAGE

OPERATIONAL AMPLIFIER
(WIDE BAND, DECOMPENSATED)
– TOP VIEW –

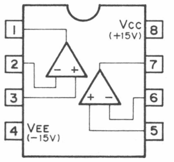
1
2
3
4 VEE (–15V)
Vcc (+15V) 8
7
6
5

REF-03GS (PMI)

REFERENCE/TEMPERATURE TRANSDUCER
– TOP VIEW –

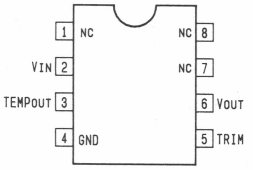
1 NC
VIN 2
TEMPOUT 3
4 GND
NC 8
NC 7
6 VOUT
5 TRIM

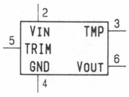
2
VIN
TMP 3
5 TRIM
GND
VOUT 6
4

VIN ; INPUT VOLTAGE(+4.5Vto+33V)
TEMPOUT ; TEMPERATURE TRANSDUCER VOLTAGE OUTPUT
TRIMIN ; OUTPUT SIGNAL TRIMMING
VOUT ; OUTPUT VOLTAGE(+2.5V)

SN74HC139ANS (TI) FLAT PACKAGE

C-MOS DUAL 2-TO-4 DECODER/DEMULTIPLEXER
– TOP VIEW –

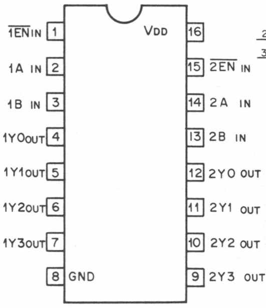
1ENIN 1
1A IN 2
1B IN 3
1Y0OUT 4
1Y1OUT 5
1Y2OUT 6
1Y3OUT 7
8 GND
VDD 16
15 2EN IN
14 2A IN
13 2B IN
12 2Y0 OUT
11 2Y1 OUT
10 2Y2 OUT
9 2Y3 OUT

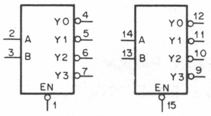
2 A
3 B
Y0 4
Y1 5
Y2 6
Y3 7
EN 1
14 A
13 B
Y0 12
Y1 11
Y2 10
Y3 9
EN 15

INPUTS			OUTPUTS			
EN	B	A	Y3	Y2	Y1	Y0
0	0	0	1	1	1	0
0	0	1	1	1	0	1
0	1	0	1	0	1	1
0	1	1	0	1	1	1
1	X	X	1	1	1	1

0 ; LOW LEVEL
1 ; HIGH LEVEL
X ; DON'T CARE

NOTE :

TYPE	VDD
74AC/74HC	+2 to +6V
74ACT	+5V
TC74AC139	+2 to +5.5V

SN74HC193ANS (TI) FLAT PACKAGE

C-MOS PRESETTABLE SYNCHRONOUS 4-BIT UP/DOWN COUNTER
– TOP VIEW –

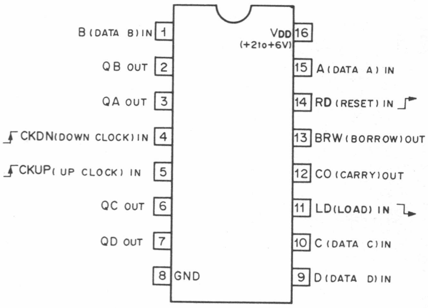
B (DATA B) IN 1
QB OUT 2
QA OUT 3
CKDN (DOWN CLOCK) IN 4
CKUP (UP CLOCK) IN 5
QC OUT 6
QD OUT 7
8 GND
VDD (+2to+6V) 16
15 A (DATA A) IN
14 RD (RESET) IN
13 BRW (BORROW) OUT
12 CO (CARRY) OUT
11 LD (LOAD) IN
10 C (DATA C) IN
9 D (DATA D) IN

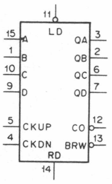
11
LD
15 A
1 B
10 C
9 D
QA 3
QB 2
QC 6
QD 7
5 CKUP
4 CKDN
CO 12
BRW 13
RD
14

CONTROL INPUT				MODE
RD	LD	CKUP	CKDN	
1	X	X	X	RESET TO ZERO
0	0	X	X	PRESET
0	1	↑	1	UP COUNT
0	1	1	↑	DOWN COUNT
0	1	1	1	NO COUNT

COUNT	OUTPUT			
	QD	QC	QB	QA
0	0	0	0	0
1	0	0	0	1
2	0	0	1	0
3	0	0	1	1
4	0	1	0	0
5	0	1	0	1
6	0	1	1	0
7	0	1	1	1
8	1	0	0	0
9	1	0	0	1
10	1	0	1	0
11	1	0	1	1
12	1	1	0	0
13	1	1	0	1
14	1	1	1	0
15	1	1	1	1

UP COUNT ↓
DOWN COUNT ↑

0 ; LOW LEVEL
1 ; HIGH LEVEL
X ; DON'T CARE

$CO = \overline{\overline{CKUP} \cdot QA \cdot QB \cdot QC \cdot QD}$

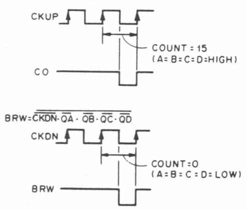
CKUP
COUNT = 15 (A=B=C=D=HIGH)
CO
CKDN
COUNT = 0 (A=B=C=D=LOW)
BRW

$BRW = \overline{\overline{CKDN} \cdot \overline{QA} \cdot \overline{QB} \cdot \overline{QC} \cdot \overline{QD}}$

SN74HC241ANS (TI)

C-MOS 3-STATE NONINVERTING BUFFER/LINE DRIVER/LINE RECEIVER
– TOP VIEW –

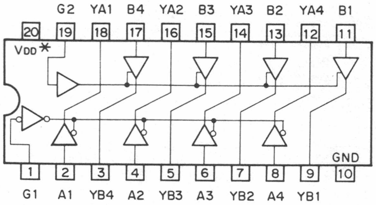
G2
YA1
B4
YA2
B3
YA3
B2
YA4
B1
20
19
18
17
16
15
14
13
12
11
VDD *
GND
1
2
3
4
5
6
7
8
9
10
G1
A1
YB4
A2
YB3
A3
YB2
A4
YB1

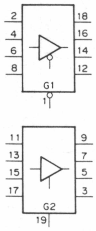
2
4
6
8
18
16
14
12
G1
1
11
13
15
17
9
7
5
3
G2
19

* V_{DD}
HC; +2 to +6V
HCT; +5V

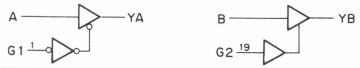
A
YA
G1
1
B
YB
G2
19

G1	A	YA
0	0	0
0	1	1
1	X	HI-Z

G2	B	YB
1	0	0
1	1	1
0	X	HI-Z

0; LOW LEVEL
1; HIGH LEVEL
X; DON'T CARE
HI-Z; HIGH IMPEDANCE

SN74HC574ANS (TI) FLAT PACKAGE

C-MOS 3-STATE D-TYPE EDGE-TRIGGERED FLIP-FLOP
– TOP VIEW –

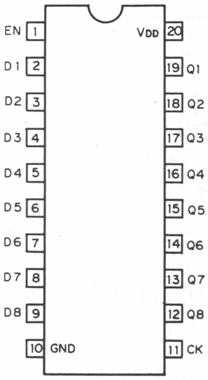
EN 1
D1 2
D2 3
D3 4
D4 5
D5 6
D6 7
D7 8
D8 9
10 GND
VDD 20
19 Q1
18 Q2
17 Q3
16 Q4
15 Q5
14 Q6
13 Q7
12 Q8
11 CK

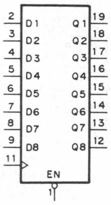
2 D1
3 D2
4 D3
5 D4
6 D5
7 D6
8 D7
9 D8
11
Q1 19
Q2 18
Q3 17
Q4 16
Q5 15
Q6 14
Q7 13
Q8 12
EN
1

EACH FLIP-FLOP

INPUTS			OUT
EN	CK	D	Q
0	↑	1	1
0	↑	0	0
0	↓	X	Qo
1	X	X	HI–Z

0 ; LOW LEVEL
1 ; HIGH LEVEL
X ; DON'T CARE
HI-Z ; HIGH IMPEDANCE
Qo ; NO CHANGE

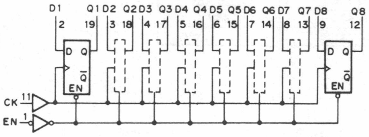
D1
Q1
D2
Q2
D3
Q3
D4
Q4
D5
Q5
D6
Q6
D7
Q7
D8
Q8
2
19
3
18
4
17
5
16
6
15
7
14
8
13
9
12
D
Q
Q̄
EN
CK
11
EN
1

NOTE :

TYPE	V_{DD}
74AC/74HC	+2 to +6V
74ACT/74HCT	+5V
TC74AC574F	+2 to +5.5V

SN75ALS181NS (TI) FLAT PACKAGE

C-MOS DIFFERENTIAL LINE DRIVER/RECEIVER
– TOP VIEW –

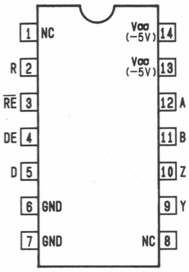
1 NC
R 2
RE̅ 3
DE 4
D 5
6 GND
7 GND
VDD (–5V) 14
VDD (–5V) 13
12 A
11 B
10 Z
9 Y
NC 8

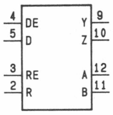
4 DE
5 D
3 RE
2 R
Y 9
Z 10
A 12
B 11

DRIVER CIRCUIT

INPUT D	ENABLE DE	OUTPUT	
		Y	Z
1	1	1	0
0	1	0	1
X	0	Z	Z

RECEIVER CIRCUIT

DIFFERENTIAL INPUT A–B	ENABLE RE	OUTPUT R
$V_{ID} \geq 0.2V$	0	1
$-0.2V < V_{ID} < 0.2V$	0	?
$V_{ID} \leq -0.2V$	0	0
X	1	Z

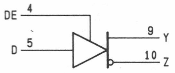
DE
4
D
5
9
Y
10
Z

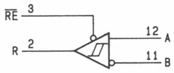
RE̅
3
R
2
12
A
11
B

TC40H004F (TOSHIBA) FLAT PACKAGE

C-MOS INVERTER
– TOP VIEW –

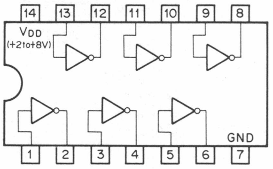
14
13
12
11
10
9
8
VDD (+2to+8V)
GND
1
2
3
4
5
6
7

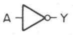

$Y = \overline{A}$

A	Y
0	1
1	0

0; LOW LEVEL
1; HIGH LEVEL

TC4S584F (TOSHIBA) FLAT PACKAGE

C-MOS SCHMITT TRIGGER INVERTER
– TOP VIEW –

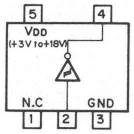
5
4
VDD
(+3V to+18V)
N.C
GND
1
2
3

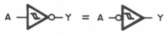

$Y = \overline{A}$

A	Y
0	1
1	0

0 ; LOW LEVEL
1 ; HIGH LEVEL

TC4S66F (TOSHIBA)

C-MOS BILATERAL ANALOG SWITCH
– TOP VIEW –

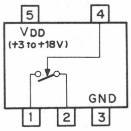
5
4
VDD
(+3 to +18V)
GND
1
2
3

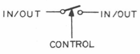
IN/OUT
IN/OUT
CONTROL

CONTROL	SWITCH
0	OFF
1	ON

0; LOW LEVEL
1; HIGH LEVEL

TC4S71F (TOSHIBA) FLAT PACKAGE

C-MOS 2-INPUT OR GATE
– TOP VIEW –

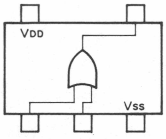

(MINI MOLD PACKAGE)

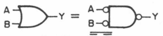

$Y = A + B = \overline{\overline{A}.\overline{B}}$

A	B	Y
0	0	0
0	1	1
1	0	1
1	1	1

0; LOW LEVEL
1; HIGH LEVEL

TC4W53F (TOSHIBA) FLAT PACKAGE

C-MOS 2-CHANNEL MULTIPLEXER/DEMULTIPLEXER
– TOP VIEW –

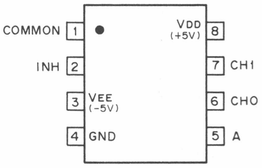
COMMON 1
INH 2
3 VEE (−5V)
4 GND
VDD (+5V) 8
7 CH1
6 CHO
5 A

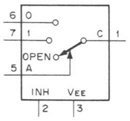
6 0
7 1
5 A
OPEN
C 1
INH
VEE
2
3

0; LOW LEVEL
1; HIGH LEVEL
X; DON'T CARE

CONT. INPUT		ON CHANNEL
INH	A	
0	0	0
0	1	1
1	X	OPEN

TC74AC164F (TOSHIBA) FLAT PACKAGE

C-MOS 8-BIT SERIAL-IN/PARALLEL-OUT SHIFT REGISTER
– TOP VIEW –

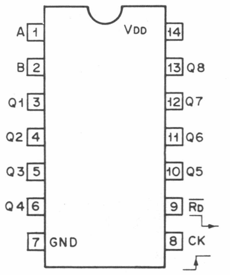
A 1
B 2
Q1 3
Q2 4
Q3 5
Q4 6
7 GND
VDD 14
13 Q8
12 Q7
11 Q6
10 Q5
9 RD
8 CK

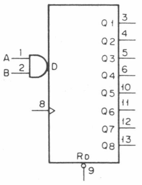
A 1
B 2
D
8
Q1 3
Q2 4
Q3 5
Q4 6
Q5 10
Q6 11
Q7 12
Q8 13
RD
9

INPUTS				OUTPUTS			
RD	CK	A	B	Q1	Q2	----	Q8
0	X	X	X	0	0	0	0
1	0	X	X	Q1o	Q2o	----	Q8o
1	↑	1	1	1	Q1n	----	Q7n
1	↑	0	X	0	Q1n	----	Q7n
1	↑	X	0	0	Q1n	----	Q7n

0; LOW LEVEL
1; HIGH LEVEL
X; DON'T CARE

NOTE :

TYPE	VDD
TC74AC164 TYPE	+2 to +5.5V
OTHER TYPES	+2 to +6V

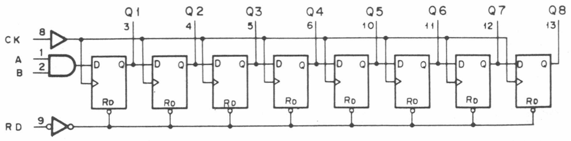
Q1 3
Q2 4
Q3 5
Q4 6
Q5 10
Q6 11
Q7 12
Q8 13
CK 8
A 1
B 2
RD 9
D
Q
RD

TC74HC4052AF (TOSHIBA) FLAT PACKAGE

C-MOS DUAL 4-CHANNEL ANALOG MULTIPLEXER/DEMULTIPLEXER
– TOP VIEW –

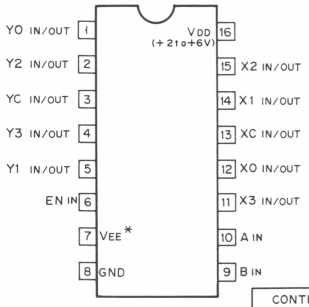
YO IN/OUT 1
Y2 IN/OUT 2
YC IN/OUT 3
Y3 IN/OUT 4
Y1 IN/OUT 5
EN IN 6
7 VEE*
8 GND
VDD (+2 to +6V) 16
15 X2 IN/OUT
14 X1 IN/OUT
13 XC IN/OUT
12 XO IN/OUT
11 X3 IN/OUT
10 A IN
9 B IN

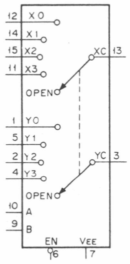
12 XO
14 X1
15 X2
11 X3
OPEN
XC 13
1 YO
5 Y1
2 Y2
4 Y3
OPEN
YC 3
10 A
9 B
EN 6
VEE 7

VEE*; VDD − VEE = + 3 to +12 V

CONTROL INPUTS			"ON" CHANNEL
EN	B	A	
0	0	0	0
0	0	1	1
0	1	0	2
0	1	1	3
1	X	X	OPEN

0; LOW LEVEL
1; HIGH LEVEL
X; DON'T CARE.

TC74HC4053AF (TOSHIBA) FLAT PACKAGE

C-MOS TRIPLE 2-CHANNEL ANALOG MULTIPLEXER/DEMULTIPLEXER
– TOP VIEW –

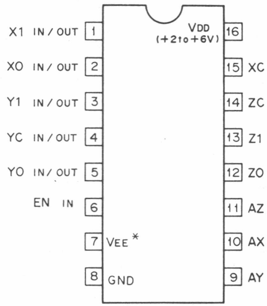
X1 IN/OUT 1
XO IN/OUT 2
Y1 IN/OUT 3
YC IN/OUT 4
YO IN/OUT 5
EN IN 6
7 VEE*
8 GND
VDD (+2 to +6V) 16
15 XC IN/OUT
14 ZC IN/OUT
13 Z1 IN/OUT
12 ZO IN/OUT
11 AZ IN/OUT
10 AX IN/OUT
9 AY IN/OUT

VEE*; VDD−VEE = +3 to +12V
VEE ≦ GND

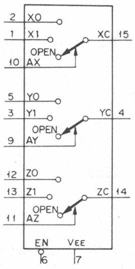
2 XO
1 X1
10 AX
OPEN
XC 15
5 YO
3 Y1
9 AY
OPEN
YC 4
12 ZO
13 Z1
11 AZ
OPEN
ZC 14
EN 6
VEE 7

0; LOW LEVEL
1; HIGH LEVEL
X; DON'T CARE.

CONT. INPUTS		ON CHANNEL
EN	A (X,Y,Z,)	
0	0	0
0	1	1
1	X	OPEN

TC74HC4538AF (TOSHIBA) FLAT PACKAGE

C - MOS DUAL RETRIGGERABLE / NON - RETRIGGERABLE MONOSTABLE MULTIVIBRATOR
– TOP VIEW –

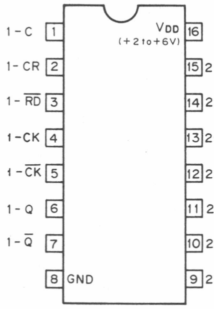
1-C 1
1-CR 2
1-RD 3
1-CK 4
1-CK 5
1-Q 6
1-Q̄ 7
8 GND
VDD (+2 to +6V) 16
15 2-C
14 2-CR
13 2-RD
12 2-CK
11 2-CK
10 2-Q
9 2-Q̄

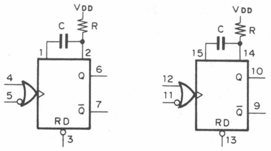
VDD
C
R
1
2
4
5
Q 6
Q̄ 7
RD
3
15
14
12
11
Q 10
Q̄ 9
RD
13

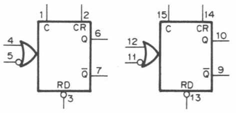
1
2
C
CR
4
5
Q 6
Q̄ 7
RD
3
15
14
12
11
Q 10
Q̄ 9
RD
13

OUTPUT PULSE WIDTH = k·C·R

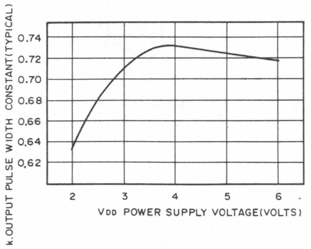

RETRIGGERABLE M.M.V

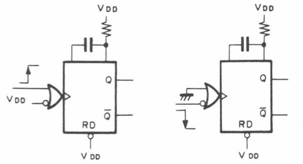
VDD
Q
Q̄
RD
VDD

NON-RETRIGGERABLE M.M.V

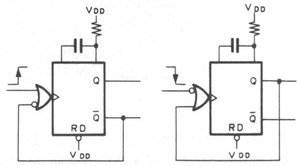
VDD
Q
Q̄
RD
VDD

SC7S00F (MOTOROLA) FLAT PACKAGE
TC7S00F (TOSHIBA) FLAT PACKAGE

C-MOS 2-INPUT NAND GATE
– TOP VIEW –

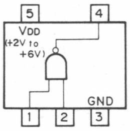
5
4
VDD (+2V to +6V)
GND
1
2
3

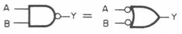

$Y = \overline{A \cdot B} = \overline{A} + \overline{B}$

A	B	Y
0	0	1
0	1	1
1	0	1
1	1	0

0 ; LOW LEVEL
1 ; HIGH LEVEL

SC7S02F (MOTOROLA) FLAT PACKAGE
TC7S02F (TOSHIBA) FLAT PACKAGE

C-MOS 2-INPUT NOR GATE
– TOP VIEW –

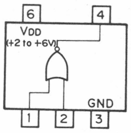
6
4
VDD
(+2 to +6V)
GND
1
2
3

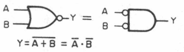

$$Y=\overline{A+B}=\overline{A}\cdot\overline{B}$$

A	B	Y
0	0	1
0	1	0
1	0	0
1	1	0

0 ; LOW LEVEL
1 ; HIGH LEVEL

SC7S04F (MOTOROLA) FLAT PACKAGE
TC7S04F (TOSHIBA) FLAT PACKAGE

C-MOS INVERTER
– TOP VIEW –

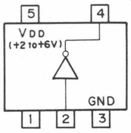
5
4
VDD
(+2 to +6V)
GND
1
2
3

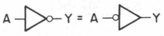

$$Y=\overline{A}$$

A	Y
0	1
1	0

0; LOW LEVEL
1; HIGH LEVEL

TC7S08F (TOSHIBA) FLAT PACKAGE

C-MOS 2-INPUT AND GATE
– TOP VIEW –

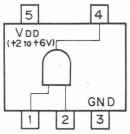
5
4
VDD
(+2 to +6V)
GND
1
2
3

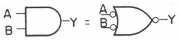

$$Y=A\cdot B=\overline{\overline{A}+\overline{B}}$$

A	B	Y
0	0	0
0	1	0
1	0	0
1	1	1

0; LOW LEVEL
1; HIGH LEVEL

SC7S32F (MOTOROLA) FLAT PACKAGE
TC7S32F (TOSHIBA) FLAT PACKAGE

C-MOS 2-INPUT OR GATE
– TOP VIEW –

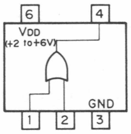
6
4
VDD
(+2 to +6V)
GND
1
2
3

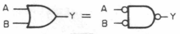

$$Y=A+B=\overline{\overline{A}\cdot\overline{B}}$$

A	B	Y
0	0	0
0	1	1
1	0	1
1	1	1

0; LOW LEVEL
1; HIGH LEVEL

TC9800FW (TOSHIBA)

C-MOS ELECTRICALLY ERASABLE PROGRAMMABLE LOGIC DEVICE
– TOP VIEW –

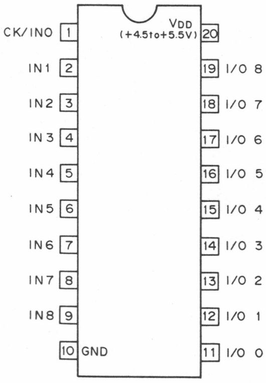
CK/IN0 1
IN1 2
IN2 3
IN3 4
IN4 5
IN5 6
IN6 7
IN7 8
IN8 9
10 GND
VDD (+4.5 to +5.5V) 20
19 I/O 8
18 I/O 7
17 I/O 6
16 I/O 5
15 I/O 4
14 I/O 3
13 I/O 2
12 I/O 1
11 I/O 0

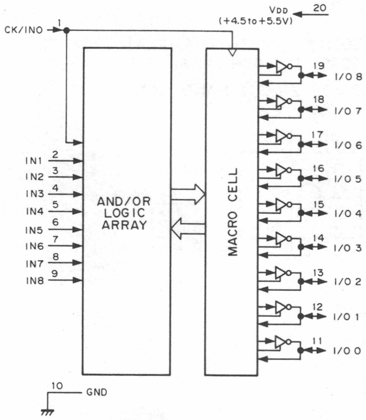
VDD
(+4.5 to +5.5V)
20
CK/IN0
1
IN1 2
IN2 3
IN3 4
IN4 5
IN5 6
IN6 7
IN7 8
IN8 9
AND/OR LOGIC ARRAY
MACRO CELL
19 I/O 8
18 I/O 7
17 I/O 6
16 I/O 5
15 I/O 4
14 I/O 3
13 I/O 2
12 I/O 1
11 I/O 0
10
GND

* ABOVE DIAGRAM SHOWS CONDITIONS BEFORE PROGRAMMING.

TL1451ACNS (TI) FLAT PACKAGE

DUAL PWM POWER CONTROLLER
– TOP VIEW –

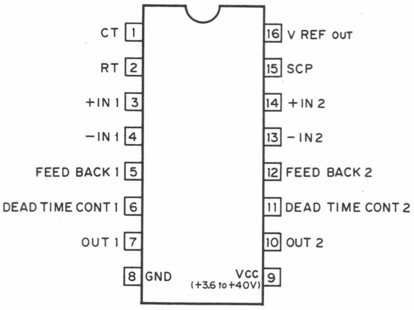
CT 1
RT 2
+IN 1 3
−IN 1 4
FEED BACK 1 5
DEAD TIME CONT 1 6
OUT 1 7
8 GND
16 V REF OUT
15 SCP
14 +IN 2
13 −IN2
12 FEED BACK 2
11 DEAD TIME CONT 2
10 OUT 2
VCC (+3.6 to +40V) 9

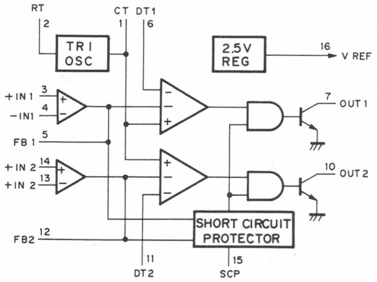
RT
2
CT
1
DT1
6
TRI OSC
2.5V REG
16
V REF
+IN 1 3
−IN1 4
FB 1 5
+IN 2 14
+IN 2 13
FB2 12
7 OUT 1
10 OUT 2
SHORT CIRCUIT PROTECTOR
11
DT2
15
SCP

TL712CPS (TI) FLAT PACKAGE

HIGH SPEED COMPARATOR (TTL OUTPUT)
– TOP VIEW –

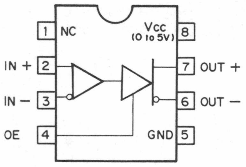
1 NC
IN + 2
IN − 3
OE 4
Vcc (0 to 5V) 8
7 OUT +
6 OUT −
GND 5

TL7705CPS-B (TI) FLAT PACKAGE

POWER VOLTAGE SUPERVISOR
– TOP VIEW –

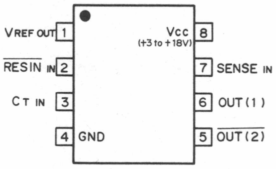
VREF OUT 1
RESIN IN 2
CT IN 3
4 GND
Vcc (+3 to +18V) 8
7 SENSE IN
6 OUT (1)
5 OUT (2)

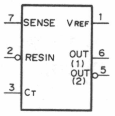
7 SENSE
2 RESIN
3 CT
VREF 1
OUT (1) 6
OUT (2) 5

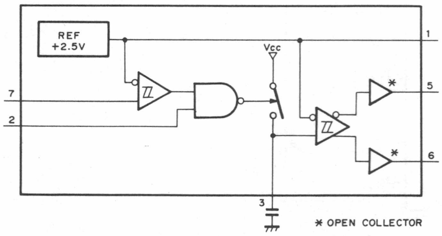
REF +2.5V
Vcc
7
2
3
1
5
6
*
*

* OPEN COLLECTOR

TLC27L2CPS (TI) FLAT PACKAGE

OPERATIONAL AMPLIFIER
– TOP VIEW –

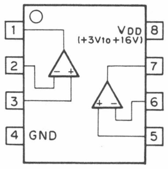
1
2
3
4
GND
VDD
(+3Vto+16V)
8
7
6
5

TLC339CNS (TI)

QUAD COMPARATOR
– TOP VIEW –

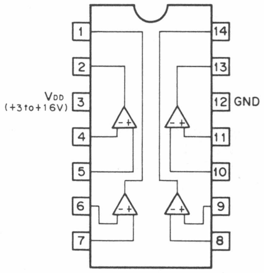
1
2
VDD
(+3to+16V)
3
4
5
6
7
14
13
12
GND
11
10
9
8

UPA103G (NEC)

DIFFERENTIAL AMPLIFIERS/PULSE PATTERN GENERATORS
– TOP VIEW –

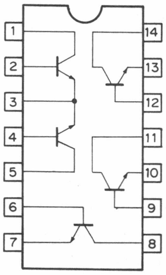
1
2
3
4
5
6
7
14
13
12
11
10
9
8

UPC311G2 (NEC) FLAT PACKAGE

VOLTAGE COMPARATOR
– TOP VIEW –

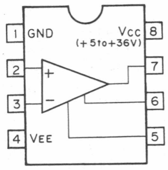
1
GND
2
3
4
VEE
VCC
(+5to+36V)
8
7
6
5

UPC4062G2 (NEC) FLAT PACKAGE

TTL-DUAL OPERATIONAL AMPLIFIER WITH LOW POWER CONSUMPTION
– TOP VIEW –

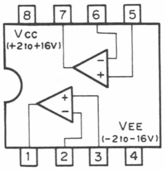
8
7
6
5
VCC
(+2to+16V)
VEE
(-2to-16V)
1
2
3
4

UPD6453GT (NEC) FLAT PACKAGE

C-MOS ON-SCREEN CHARACTER DISPLAY

– TOP VIEW –

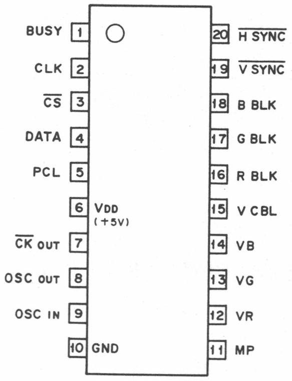
BUSY 1
CLK 2
$\overline{\text{CS}}$ 3
DATA 4
PCL 5
6 VDD (+5V)
$\overline{\text{CK}}$ OUT 7
OSC OUT 8
OSC IN 9
10 GND
20 $\overline{\text{H SYNC}}$
19 $\overline{\text{V SYNC}}$
18 B BLK
17 G BLK
16 R BLK
15 V CBL
14 VB
13 VG
12 VR
11 MP

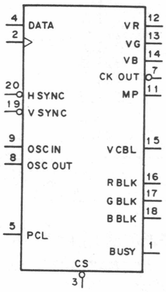
4 DATA
2
20 H SYNC
19 V SYNC
9 OSC IN
8 OSC OUT
5 PCL
VR 12
VG 13
VB 14
CK OUT 7
MP 11
VCBL 15
R BLK 16
G BLK 17
B BLK 18
BUSY 1
CS 3

INPUT

CLK ; CLOCK
$\overline{\text{CS}}$; CHIP SELECT
DATA ; SERIAL DATA
$\overline{\text{H SYNC}}$; HORIZONTAL SYNC
OSC IN ; OSCILLATOR IN
PCL ; POWER ON CLEAR
$\overline{\text{V SYNC}}$; VERTICAL SYNC

OUTPUT

B_{BLK}, R_{BLK}, G_{BLK} : B, R, G, BLANKING
BUSY ; BUSY OUT
$\overline{\text{CK}}$ OUT ; CLOCK
MP ; MASK PULSE
OSC OUT ; OSCILLATOR OUT
V_R, V_G, V_B ; R, G, B, CHARACTER DATA
V_{CBL} ; VIDEO CUT BLANKING

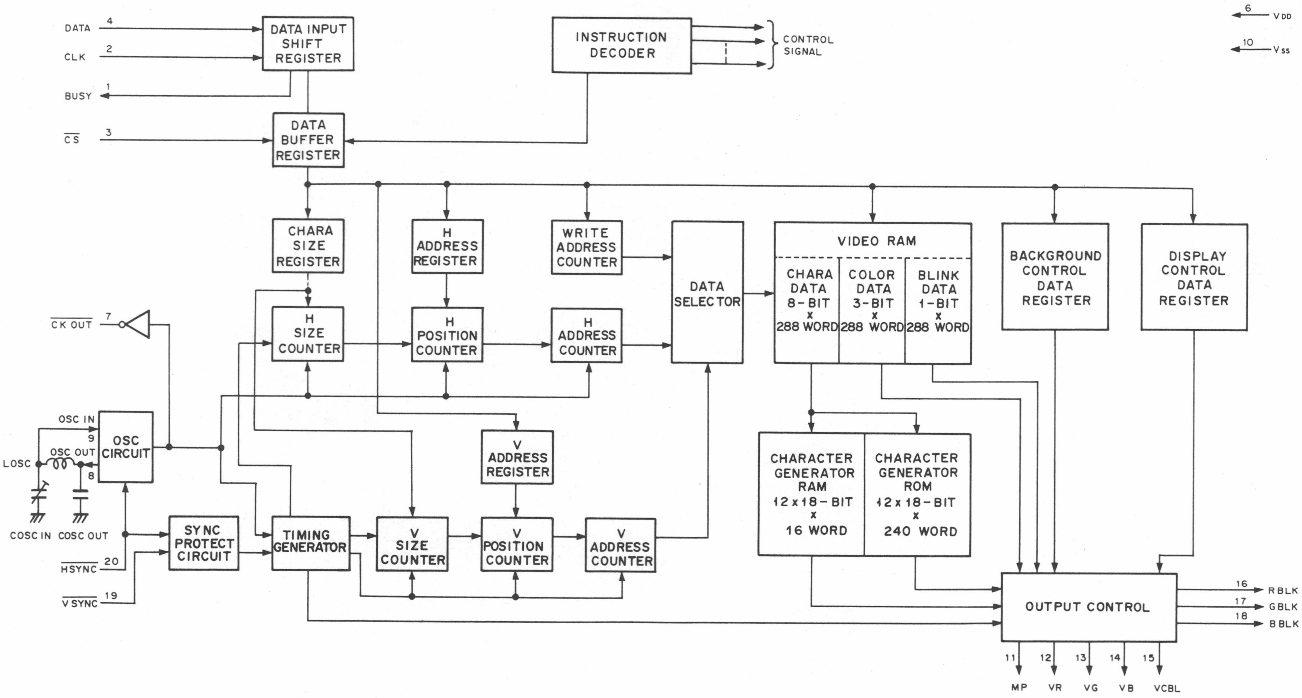
DATA 4
CLK 2
BUSY 1
$\overline{\text{CS}}$ 3
DATA INPUT SHIFT REGISTER
INSTRUCTION DECODER
CONTROL SIGNAL
6 VDD
10 Vss
DATA BUFFER REGISTER
CHARA SIZE REGISTER
H ADDRESS REGISTER
WRITE ADDRESS COUNTER
DATA SELECTOR
VIDEO RAM
CHARA DATA 8-BIT x 288 WORD
COLOR DATA 3-BIT x 288 WORD
BLINK DATA 1-BIT x 288 WORD
BACKGROUND CONTROL DATA REGISTER
DISPLAY CONTROL DATA REGISTER
$\overline{\text{CK OUT}}$ 7
H SIZE COUNTER
H POSITION COUNTER
H ADDRESS COUNTER
OSC IN 9
OSC OUT
8
LOSC
COSC IN
COSC OUT
OSC CIRCUIT
V ADDRESS REGISTER
CHARACTER GENERATOR RAM 12x18-BIT x 16 WORD
CHARACTER GENERATOR ROM 12x18-BIT x 240 WORD
$\overline{\text{HSYNC}}$ 20
$\overline{\text{VSYNC}}$ 19
SYNC PROTECT CIRCUIT
TIMING GENERATOR
V SIZE COUNTER
V POSITION COUNTER
V ADDRESS COUNTER
OUTPUT CONTROL
16 RBLK
17 GBLK
18 BBLK
11 MP
12 VR
13 VG
14 VB
15 VCBL

SECTION C
SCHEMATIC DIAGRAMS AND BOARD ILLUSTRATION

BOARD LAYOUT

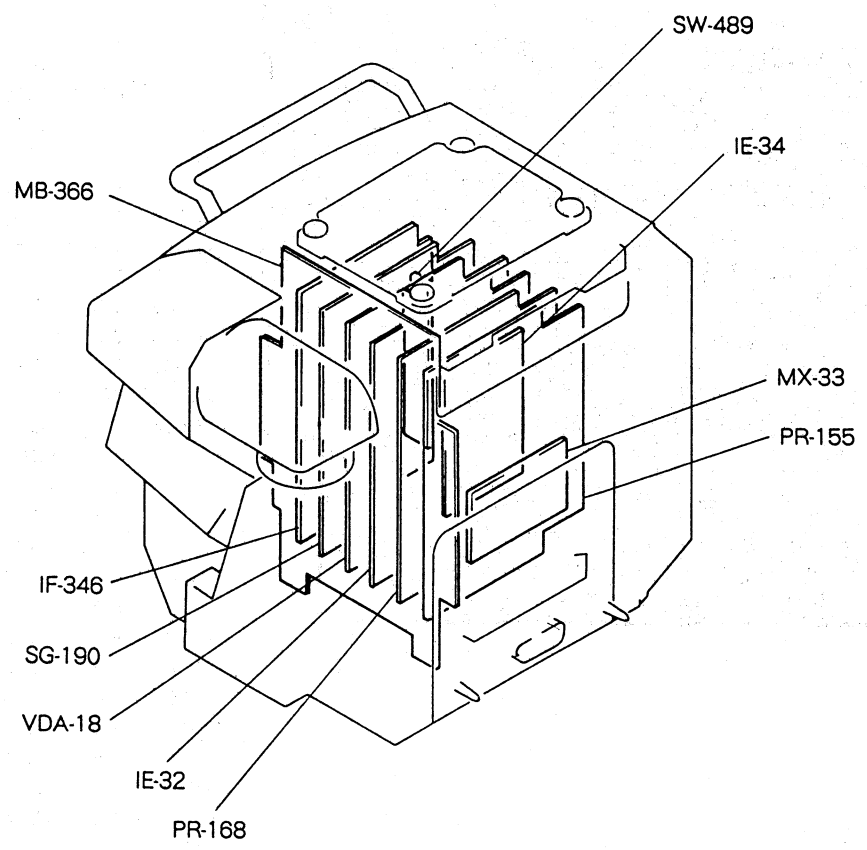
SW-489
IE-34
MB-366
MX-33
PR-155
IF-346
SG-190
VDA-18
IE-32
PR-168

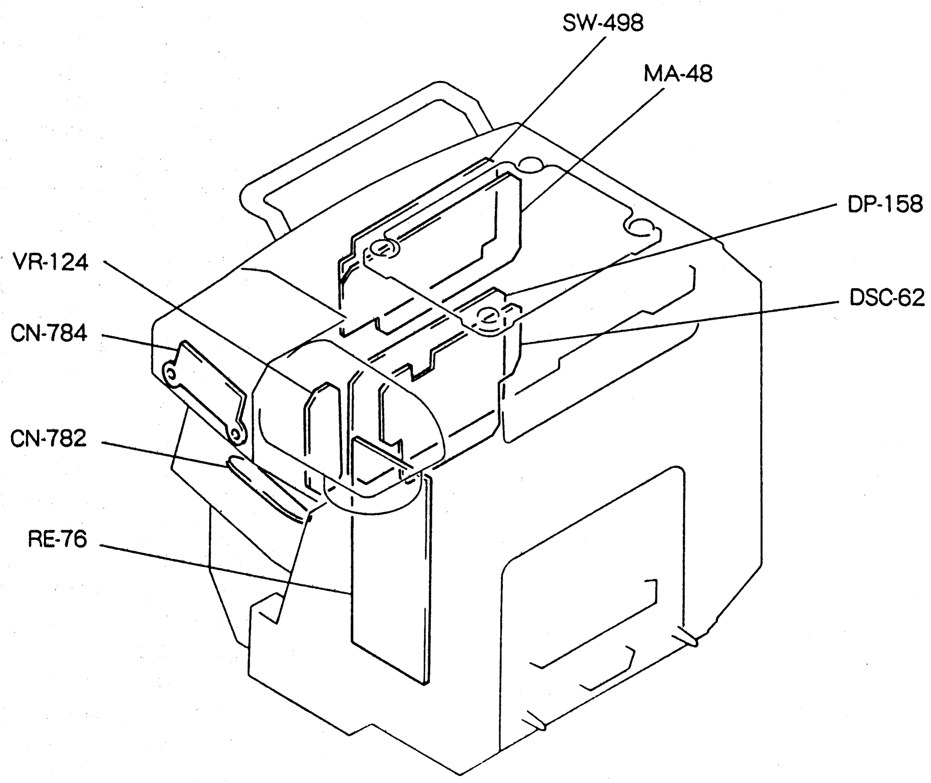
SW-498
MA-48
DP-158
VR-124
DSC-62
CN-784
CN-782
RE-76

PR-155 BOARD

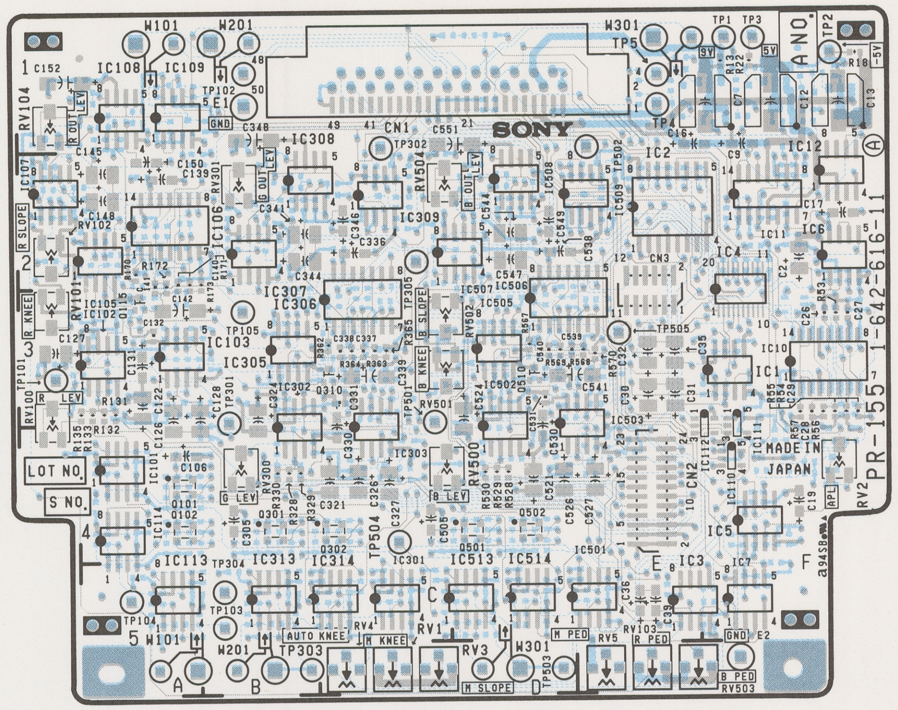

1-642-616-11 COMPONENT SIDE

PR-155 1-642-616-11

∗Soldering Side

CN1	C-1	IC503	E-3	RV5	E-5
CN2	E-4	IC505	D-3	RV100	A-3
CN3	E-2	IC506	D-3	RV101	A-3
		IC507	D-2	RV102	A-2
∗D1	F-4	IC508	D-2	RV103	E-5
∗D102	A-2	IC509	E-2	RV104	A-1
∗D103	A-2	IC513	D-5	RV300	B-4
∗D104	A-1	IC514	D-5	RV301	B-2
∗D302	C-3			RV500	D-4
∗D303	C-3	∗Q1	F-4	RV501	C-3
∗D304	C-2	∗Q2	F-4	RV502	D-3
∗D502	D-3	∗Q3	F-4	RV503	F-5
∗D503	D-3	∗Q4	F-4	RV504	C-2
∗D504	E-2	∗Q5	F-4		
		∗Q6	F-4	TP1	F-1
E1	B-1	∗Q7	F-1	TP2	F-1
E2	F-5	∗Q8	E-1	TP3	F-1
		∗Q9	F-1	TP4	E-1
IC1	F-3	∗Q10	F-1	TP5	E-1
IC2	E-2	∗Q11	F-1	TP101	A-3
IC3	E-5	∗Q12	F-1	TP102	B-1
IC4	F-2	Q101	A-4	TP103	B-5
IC5	F-4	Q102	A-4	TP104	A-5
IC6	F-2	∗Q111	A-3	TP105	B-3
IC7	F-5	∗Q112	A-2	TP301	B-3
∗IC8	F-3	∗Q113	A-2	TP302	C-1
∗IC9	F-3	∗Q114	A-2	TP303	B-5
IC10	F-3	Q115	A-3	TP304	B-5
IC11	F-2	∗Q116	A-1	TP305	C-3
IC12	F-2	∗Q117	A-1	TP501	C-3
IC101	A-4	Q301	B-4	TP502	E-2
IC102	A-3	Q302	C-4	TP503	D-5
IC103	B-3	∗Q306	C-4	TP504	C-4
IC105	A-2	∗Q307	C-3	TP505	E-3
IC106	B-2	∗Q308	C-3		
IC107	A-2	∗Q309	C-3		
IC108	A-1	Q310	C-3		
IC109	A-1	∗Q311	B-2		
IC110	F-4	∗Q312	C-2		
IC111	F-4	∗Q313	C-3		
IC112	F-4	∗Q314	C-3		
IC113	A-5	Q501	D-4		
IC114	A-4	Q502	D-4		
IC301	C-5	∗Q506	E-4		
IC302	B-3	∗Q507	D-3		
IC303	C-4	∗Q508	D-3		
IC305	B-3	∗Q509	E-3		
IC306	C-3	Q510	D-3		
IC307	B-2	∗Q511	D-2		
IC308	B-2	∗Q512	E-2		
IC309	C-2				
IC313	B-5	RV1	C-5		
IC314	C-5	RV2	F-4		
IC501	E-5	RV3	D-5		
IC502	D-3	RV4	C-5		

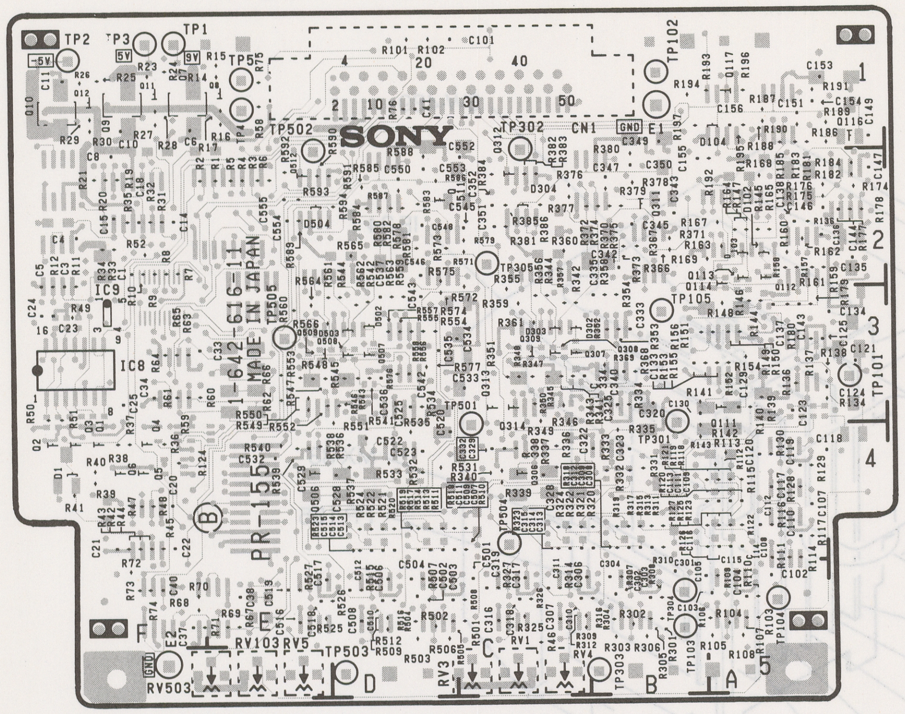

1-642-616-11 SOLDERING SIDE

PR-155 1-642-616-11

∗Soldering Side

CN1	C-1	IC503	E-3	RV5	E-5
CN2	E-4	IC505	D-3	RV100	A-3
CN3	E-2	IC506	D-3	RV101	A-3
		IC507	D-2	RV102	A-2
∗D1	F-4	IC508	D-2	RV103	E-5
∗D102	A-2	IC509	E-2	RV104	A-1
∗D103	A-2	IC513	D-5	RV300	B-4
∗D104	A-1	IC514	D-5	RV301	B-2
∗D302	C-3			RV500	D-4
∗D303	C-3	∗Q1	F-4	RV501	C-3
∗D304	C-2	∗Q2	F-4	RV502	D-3
∗D502	D-3	∗Q3	F-4	RV503	F-5
∗D503	D-3	∗Q4	F-4	RV504	C-2
∗D504	E-2	∗Q5	F-4		
		∗Q6	F-4	TP1	F-1
E1	B-1	∗Q7	F-1	TP2	F-1
E2	F-5	∗Q8	E-1	TP3	F-1
		∗Q9	F-1	TP4	E-1
IC1	F-3	∗Q10	F-1	TP5	E-1
IC2	E-2	∗Q11	F-1	TP101	A-3
IC3	E-5	∗Q12	F-1	TP102	B-1
IC4	F-2	Q101	A-4	TP103	B-5
IC5	F-4	Q102	A-4	TP104	A-5
IC6	F-2	∗Q111	A-3	TP105	B-3
IC7	F-5	∗Q112	A-2	TP301	B-3
∗IC8	F-3	∗Q113	A-2	TP302	C-1
∗IC9	F-3	∗Q114	A-2	TP303	B-5
IC10	F-3	Q115	A-3	TP304	B-5
IC11	F-2	∗Q116	A-1	TP305	C-3
IC12	F-2	∗Q117	A-1	TP501	C-3
IC101	A-4	Q301	B-4	TP502	E-2
IC102	A-3	Q302	C-4	TP503	D-5
IC103	B-3	∗Q306	C-4	TP504	C-4
IC105	A-2	∗Q307	C-3	TP505	E-3
IC106	B-2	∗Q308	C-3		
IC107	A-2	∗Q309	C-3		
IC108	A-1	Q310	C-3		
IC109	A-1	∗Q311	B-2		
IC110	F-4	∗Q312	C-2		
IC111	F-4	∗Q313	C-3		
IC112	F-4	∗Q314	C-3		
IC113	A-5	Q501	D-4		
IC114	A-4	Q502	D-4		
IC301	C-5	∗Q506	E-4		
IC302	B-3	∗Q507	D-3		
IC303	C-4	∗Q508	D-3		
IC305	B-3	∗Q509	E-3		
IC306	C-3	Q510	D-3		
IC307	B-2	∗Q511	D-2		
IC308	B-2	∗Q512	E-2		
IC309	C-2				
IC313	B-5	RV1	C-5		
IC314	C-5	RV2	F-4		
IC501	E-5	RV3	D-5		
IC502	D-3	RV4	C-5		

PR-155 BOARD

FG. 1-32
46 CHU EXPAND ON IN CN1 (46/50)
SG. 1-15
13 CAM BLKG IN CN1 (13/50)
SG. 1-34
48 CHU SEPARATE ON IN CN1 (48/50)
26 R CHU VIDEO GND CN1 (26/50)
28 R CHU VIDEO IN CN1 (28/50)
CN29 CN29
CN107
22 G CHU VIDEO GND CN1 (22/50)
24 G CHU VIDEO IN CN1 (24/50)
CN30 CN30
SG. 1-12
12 H CLAMP IN CN1 (12/50)
18 B CHU VIDEO GND CN1 (18/50)
20 B CHU VIDEO IN CN1 (20/50)
CN31 CN31
IC113 CLC505AJE
IC313 CLC505AJE
IC513 CLC505AJE
TP103
TP104
TP303
TP304
TP5 HD
TP503
TP504
MX-33
IC11 (3/4) μPC4064G
IC11 (4/4) μPC4064G
IC12 REF-03GS
CN1 (6/50) UNREG IN 6
CN1 (8/50) UNREG IN 8
5.5V
CN1 (5/50) +5.5V IN 5
CN1 (7/50) +5.5V IN 7
E1 GND
CN1 (2/50) GND 2
CN1 (4/50) GND 4
CN1 (50/50) GND 50
CN1 (49/50) GND 49
CN1 (1/50) -5.5V IN 1
CN1 (3/50) -5.5V IN 3
-5.5V
CN1 (16/50) LD (PR) IN 16 IF. 1-16
CN1 (10/50) SERIAL DATA IN 10 IF. 1-10
CN1 (9/50) SYSTEM CLOCK IN 9 IF. 1-9
CN1 (37/50) R PR VIDEO OUT 37 PR-168. 1-38
CN1 (35/50) R PR VIDEO GND 35
CN1 (33/50) G PR VIDEO OUT 33 PR-168. 1-34
CN1 (31/50) G PR VIDEO GND 31
TP4 VD
CN1 (14/50) VD IN 14
CN1 (15/50) KNEE NAM SIG OUT 15 IF. 1-15
CN1 (11/50) DIAG SAMPLE IN 11 SG. 1-11
CN1 (29/50) B PR VIDEO OUT 29 PR-168. 1-30
CN1 (27/50) B PR VIDEO GND 27
1
2
3
4
5
A
B
C
D
E
F
G
H
I
J
K
L
M
N
O
P

NOTE

NM : NO MOUNT

PR-155 BOARD

HDCA-50 (W.W)

B-¥HDCA50-PR155/M

MX-33 BOARD

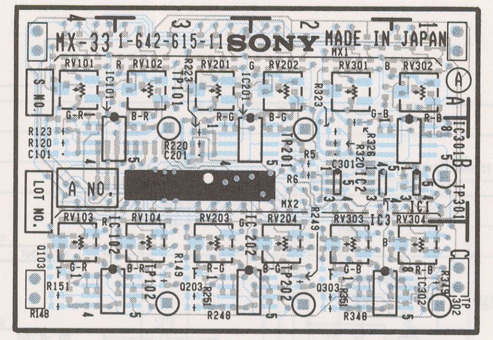
MX-33 1-642-615-11
SONY
MADE IN JAPAN

1-642-615-11 COMPONENT SIDE

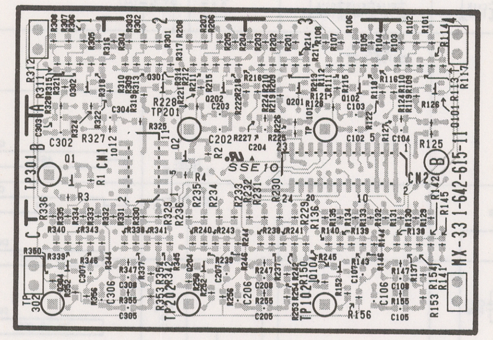

1-642-615-11 SOLDERING SIDE

MX-33 BOARD

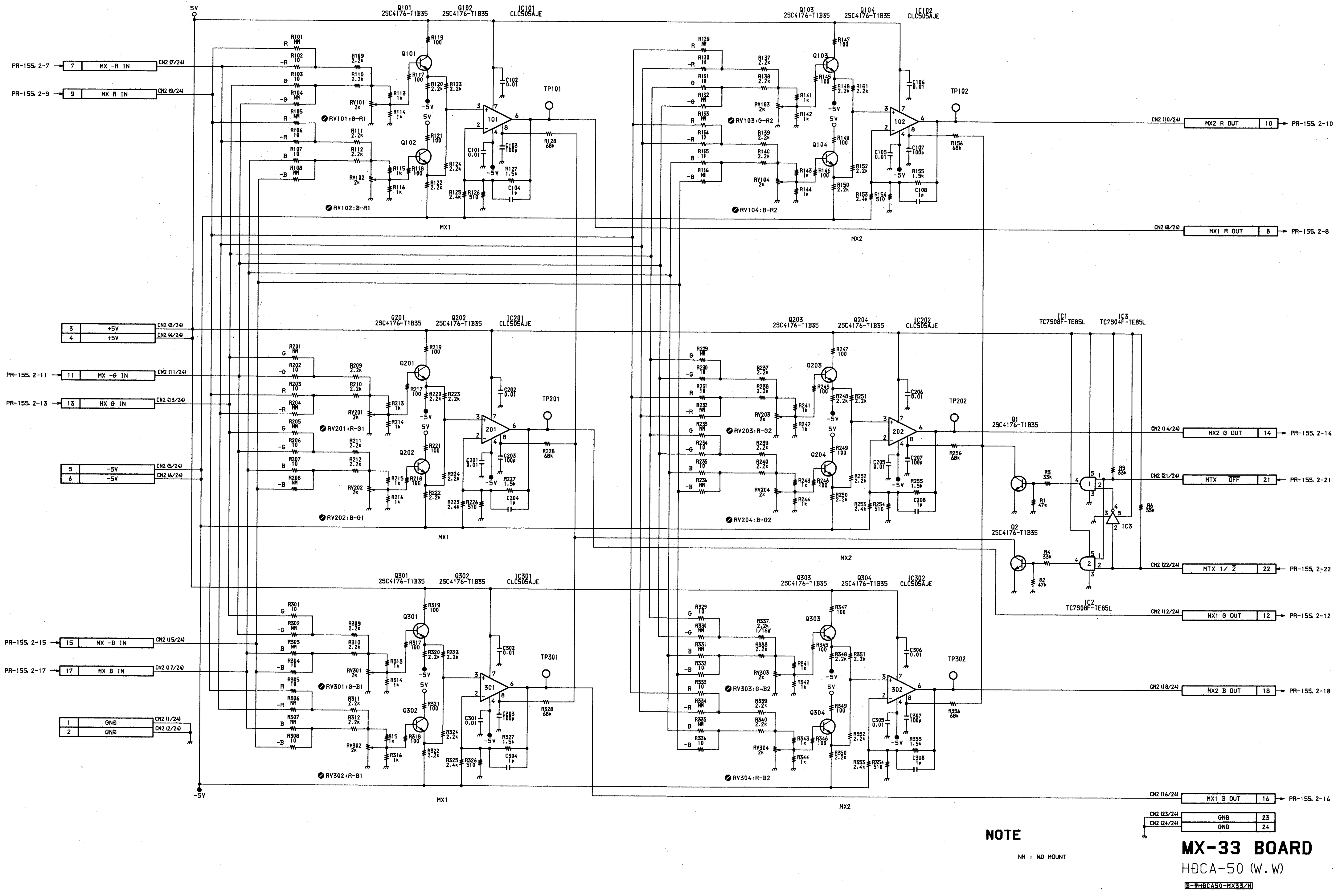
5V
-5V
Q101 2SC4176-T1B35
Q102 2SC4176-T1B35
IC101 CLC505AJE
Q103 2SC4176-T1B35
Q104 2SC4176-T1B35
IC102 CLC505AJE
Q201 2SC4176-T1B35
Q202 2SC4176-T1B35
IC201 CLC505AJE
Q203 2SC4176-T1B35
Q204 2SC4176-T1B35
IC202 CLC505AJE
Q301 2SC4176-T1B35
Q302 2SC4176-T1B35
IC301 CLC505AJE
Q303 2SC4176-T1B35
Q304 2SC4176-T1B35
IC302 CLC505AJE
IC1 TC7S08F-TE85L
IC3 TC7S04F-TE85L
IC2 TC7S08F-TE85L
Q1 2SC4176-T1B35
Q2 2SC4176-T1B35
TP101
TP102
TP201
TP202
TP301
TP302
RV101:G-R1
RV102:B-R1
RV103:G-R2
RV104:B-R2
RV201:R-G1
RV202:B-G1
RV203:R-G2
RV204:B-G2
RV301:G-B1
RV302:R-B1
RV303:G-B2
RV304:R-B2
MX1
MX2
PR-155, 2-7 → 7 MX -R IN CN2 (7/24)
PR-155, 2-9 → 9 MX R IN CN2 (9/24)
3 +5V CN2 (3/24)
4 +5V CN2 (4/24)
PR-155, 2-11 → 11 MX -G IN CN2 (11/24)
PR-155, 2-13 → 13 MX G IN CN2 (13/24)
5 -5V CN2 (5/24)
6 -5V CN2 (6/24)
PR-155, 2-15 → 15 MX -B IN CN2 (15/24)
PR-155, 2-17 → 17 MX B IN CN2 (17/24)
1 GND CN2 (1/24)
2 GND CN2 (2/24)
CN2 (10/24) MX2 R OUT 10 → PR-155, 2-10
CN2 (8/24) MX1 R OUT 8 → PR-155, 2-8
CN2 (14/24) MX2 G OUT 14 → PR-155, 2-14
CN2 (21/24) MTX OFF 21 ← PR-155, 2-21
CN2 (22/24) MTX 1/ 2 22 ← PR-155, 2-22
CN2 (12/24) MX1 G OUT 12 → PR-155, 2-12
CN2 (18/24) MX2 B OUT 18 → PR-155, 2-18
CN2 (16/24) MX1 B OUT 16 → PR-155, 2-16
CN2 (23/24) GND 23
CN2 (24/24) GND 24
MX-33 BOARD
HDCA-50 (W.W)
B-WHDCA50-MX33/M

NOTE

NM : NO MOUNT

PR-168 BOARD

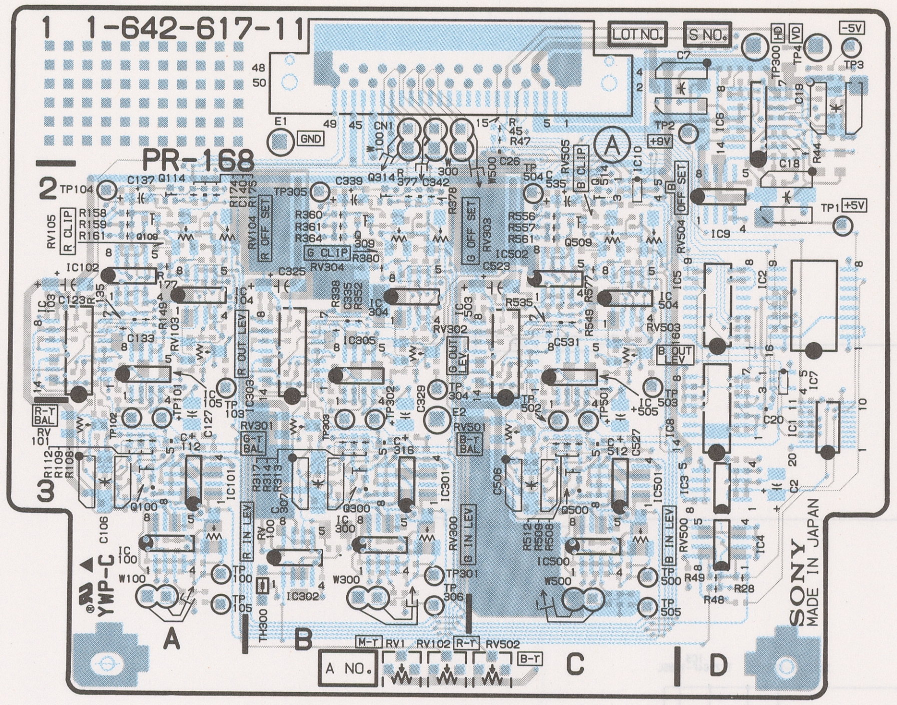

1-642-617-11 COMPONENT SIDE

PR-168 1-642-617-11

*Soldering Side

CN1	B-1
*D100	A-3
*D300	B-3
*D500	C-3
E1	B-1
E2	B-3
IC1	D-3
IC2	D-2
IC3	D-3
IC4	D-3
IC5	D-2
IC6	D-1
IC7	D-2
IC8	D-3
IC9	D-2
IC10	C-2
IC100	A-3
IC101	A-3
IC102	A-2
IC103	A-2
IC104	A-2
IC105	A-2
IC300	B-3
IC301	B-3
IC302	B-3
IC303	B-2
IC304	B-2
IC305	B-2
IC500	C-3
IC501	C-3
IC502	C-2
IC503	C-2
IC504	C-2
IC505	C-2
*Q1	C-1
*Q2	D-1
*Q3	D-2
*Q4	D-1
*Q5	D-3
*Q6	D-1
*Q7	D-1
Q100	A-3
*Q101	A-3
*Q102	A-3
*Q103	A-3
*Q104	A-1
*Q105	A-1
*Q106	A-1
*Q107	A-1
*Q108	A-1
Q109	A-2
*Q110	A-2
*Q111	A-2
*Q112	A-2
*Q113	A-2
Q114	A-2
Q300	B-3
*Q301	B-3
*Q302	B-3
*Q303	B-3
*Q304	B-2
*Q305	B-2
*Q306	B-2
*Q307	B-2
*Q308	B-2
Q309	B-2
*Q310	B-2
*Q311	B-2
*Q312	B-2
*Q313	B-2
Q314	B-2
Q500	C-3
*Q501	C-3
*Q502	C-3
*Q503	C-3
*Q504	C-2
*Q505	C-2
*Q506	C-2
*Q507	C-2
*Q508	C-2
Q509	C-2
*Q510	C-2
*Q511	C-2
*Q512	C-2
*Q513	C-2
Q514	C-2
RV1	B-3
RV100	A-3
RV101	A-3
RV102	B-3
RV103	A-2
RV104	A-2
RV105	A-2
RV300	B-3
RV301	B-3
RV302	B-2
RV303	B-2
RV304	B-2
RV500	C-3
RV501	C-3
RV502	C-3
RV503	C-2
RV504	C-2
RV505	C-2
TH300	B-3
TP1	D-2
TP2	C-1
TP3	D-1
TP4	D-1
TP100	A-3
TP101	A-3
TP102	A-3
TP103	A-2
TP104	A-2
TP105	A-3
TP300	D-1
TP301	B-3
TP302	B-3
TP303	B-3
TP304	B-2
TP305	B-2
TP306	B-3
TP500	C-3
TP501	C-3
TP502	C-3
TP503	C-2
TP504	C-2
TP505	C-3

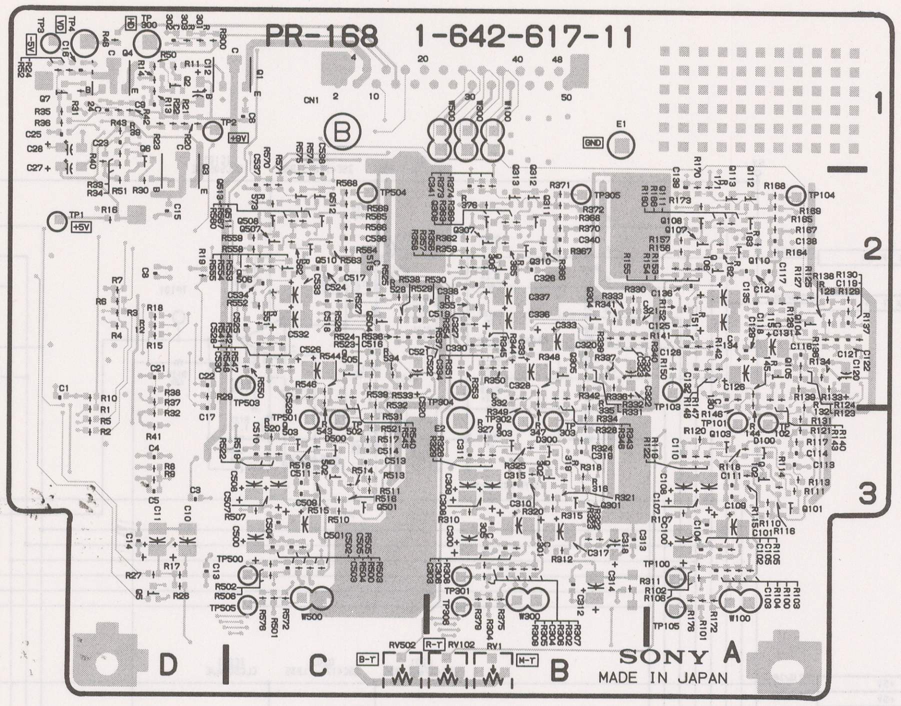

1-642-617-11 SOLDERING SIDE

PR-168 1-642-617-11

*Soldering Side

CN1	B-1
*D100	A-3
*D300	B-3
*D500	C-3
E1	B-1
E2	B-3
IC1	D-3
IC2	D-2
IC3	D-3
IC4	D-3
IC5	D-2
IC6	D-1
IC7	D-2
IC8	D-3
IC9	D-2
IC10	C-2
IC100	A-3
IC101	A-3
IC102	A-2
IC103	A-2
IC104	A-2
IC105	A-2
IC300	B-3
IC301	B-3
IC302	B-3
IC303	B-2
IC304	B-2
IC305	B-2
IC500	C-3
IC501	C-3
IC502	C-2
IC503	C-2
IC504	C-2
IC505	C-2
*Q1	C-1
*Q2	D-1
*Q3	D-2
*Q4	D-1
*Q5	D-3
*Q6	D-1
*Q7	D-1
Q100	A-3
*Q101	A-3
*Q102	A-3
*Q103	A-3
*Q104	A-1
*Q105	A-1
*Q106	A-1
*Q107	A-1
*Q108	A-1
Q109	A-2
*Q110	A-2
*Q111	A-2
*Q112	A-2
*Q113	A-2
Q114	A-2
Q300	B-3
*Q301	B-3
*Q302	B-3
*Q303	B-3
*Q304	B-2
*Q305	B-2
*Q306	B-2
*Q307	B-2
*Q308	B-2
Q309	B-2
*Q310	B-2
*Q311	B-2
*Q312	B-2
*Q313	B-2
Q314	B-2
Q500	C-3
*Q501	C-3
*Q502	C-3
*Q503	C-3
*Q504	C-2
*Q505	C-2
*Q506	C-2
*Q507	C-2
*Q508	C-2
Q509	C-2
*Q510	C-2
*Q511	C-2
*Q512	C-2
*Q513	C-2
Q514	C-2
RV1	B-3
RV100	A-3
RV101	A-3
RV102	B-3
RV103	A-2
RV104	A-2
RV105	A-2
RV300	B-3
RV301	B-3
RV302	B-2
RV303	B-2
RV304	B-2
RV500	C-3
RV501	C-3
RV502	C-3
RV503	C-2
RV504	C-2
RV505	C-2
TH300	B-3
TP1	D-2
TP2	C-1
TP3	D-1
TP4	D-1
TP100	A-3
TP101	A-3
TP102	A-3
TP103	A-2
TP104	A-2
TP105	A-3
TP300	D-1
TP301	B-3
TP302	B-3
TP303	B-3
TP304	B-2
TP305	B-2
TP306	B-3
TP500	C-3
TP501	C-3
TP502	C-3
TP503	C-2
TP504	C-2
TP505	C-3

PR-168 BOARD

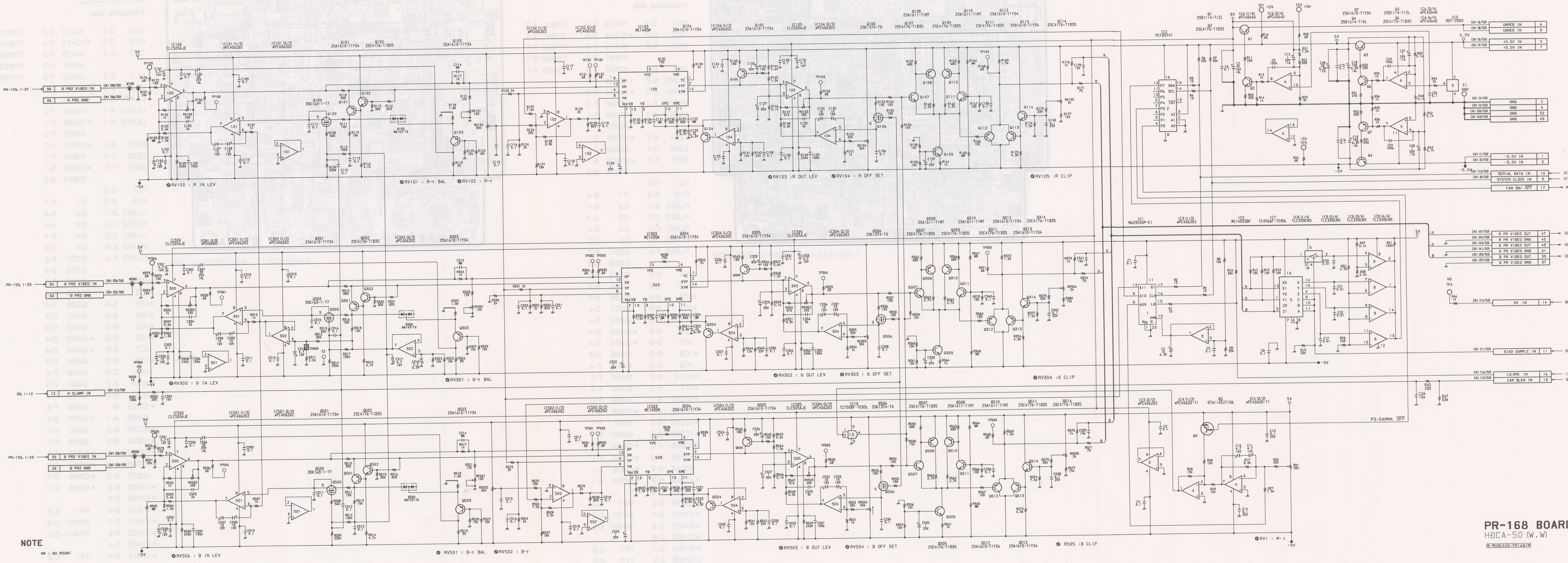
PR-155, 1-37
R PR2 VIDEO IN
R PR2 GND
PR-155, 1-33
G PR2 VIDEO IN
G PR2 GND
SG, 1-12
H CLAMP IN
PR-155, 1-29
B PR2 VIDEO IN
B PR2 GND
RV100 : R IN LEV
RV101 : R-γ BAL
RV102 : R-γ
RV103 : R OUT LEV
RV104 : R OFF SET
RV105 : R CLIP
RV300 : G IN LEV
RV301 : G-γ BAL
RV302 : G OUT LEV
RV303 : G OFF SET
RV304 : G CLIP
RV506 : B IN LEV
RV501 : B-γ BAL
RV502 : B-γ
RV503 : B OUT LEV
RV504 : B OFF SET
RV505 : B CLIP
RV1 : M-γ
UNREG IN
+5.5V IN
GND
-5.5V IN
SERIAL DATA IN
SYSTEM CLOCK IN
FAN ON/OFF
IF, 1-10
IF, 1-9
MB-564, Q3
R PR VIDEO OUT
R PR VIDEO GND
G PR VIDEO OUT
G PR VIDEO GND
B PR VIDEO OUT
B PR VIDEO GND
IE-32, 1-48
IE-32, 1-44
IE-32, 1-40
VG IN
SG, 1-14
GIAO SAMPLE IN
SG, 1-11
LG PRG IN
CAM BLKG IN
IF, 1-14
SG, 1-15
P3:GAMMA OFF

NOTE

NM : NO MOUNT

PR-168 BOARD
HDCA-50 (W.W)
B-¥HDCA50-PR168/M

HDCA-50

C-7 C-7 C-7

IE-32 BOARD

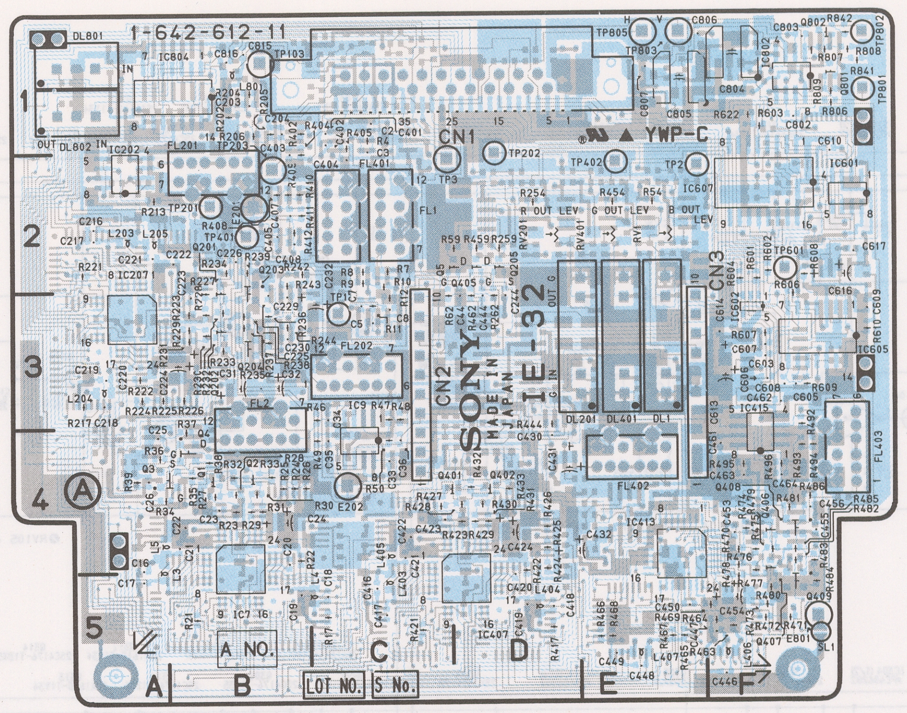

1-642-612-11 COMPONENT SIDE

IE-32 1-642-612-11

*Soldering Side

CN1	D-1
CN2	C-3
CN3	E-2
DL1	E-3
DL201	E-3
DL401	E-3
DL801	A-1
DL802	A-1
E201	B-2
E202	C-4
E801	F-5
FL1	C-2
FL2	B-3
FL201	B-1
FL202	C-3
FL401	C-2
FL402	E-4
FL403	F-4
*IC1	C-1
*IC2	C-2
*IC3	B-4
*IC4	B-4
*IC5	B-5
*IC6	B-5
IC7	B-5
*IC8	B-3
IC9	C-3
*IC10	E-2
*IC11	D-3
*IC201	B-1
IC202	A-1
*IC203	B-2
*IC204	B-3
*IC205	A-2
*IC206	A-3
IC207	A-2
*IC208	B-3
*IC209	C-3
*IC210	D-2
*IC401	D-1
*IC402	B-2
*IC403	C-4
*IC404	D-4
*IC405	C-5
*IC406	D-5
IC407	D-5
*IC408	D-4
*IC409	E-4
*IC410	E-2
*IC411	F-5
*IC412	E-5
IC413	E-4
*IC414	F-4
IC415	F-3
IC601	F-2
IC602	F-3
*IC603	F-3
*IC604	F-3
IC605	F-3
*IC606	F-1
IC607	F-2
*IC801	F-1
IC802	F-1
*IC803	B-1
IC804	B-2
Q1	B-4
Q2	B-4
Q3	A-4
Q4	B-4
Q5	C-2
Q201	B-2
Q202	B-3
Q203	B-2
Q204	B-3
Q205	D-2
Q401	C-4
Q402	D-4
*Q403	D-4
*Q404	D-4
Q405	D-2
Q406	F-4
Q407	F-5
Q408	F-4
Q409	F-5
*Q607	B-1
Q801	F-1
Q802	F-1
*Q803	E-1
*Q804	E-1
*Q805	C-1
*Q806	B-1
RV1	E-2
RV201	D-2
RV401	E-2
TP1	C-3
TP2	E-2
TP3	C-2
TP103	B-1
TP201	B-2
TP202	D-2
TP203	B-2
TP401	B-2
TP402	E-2
TP601	F-2
TP801	F-1
TP802	F-1
TP803	E-1
TP805	E-1

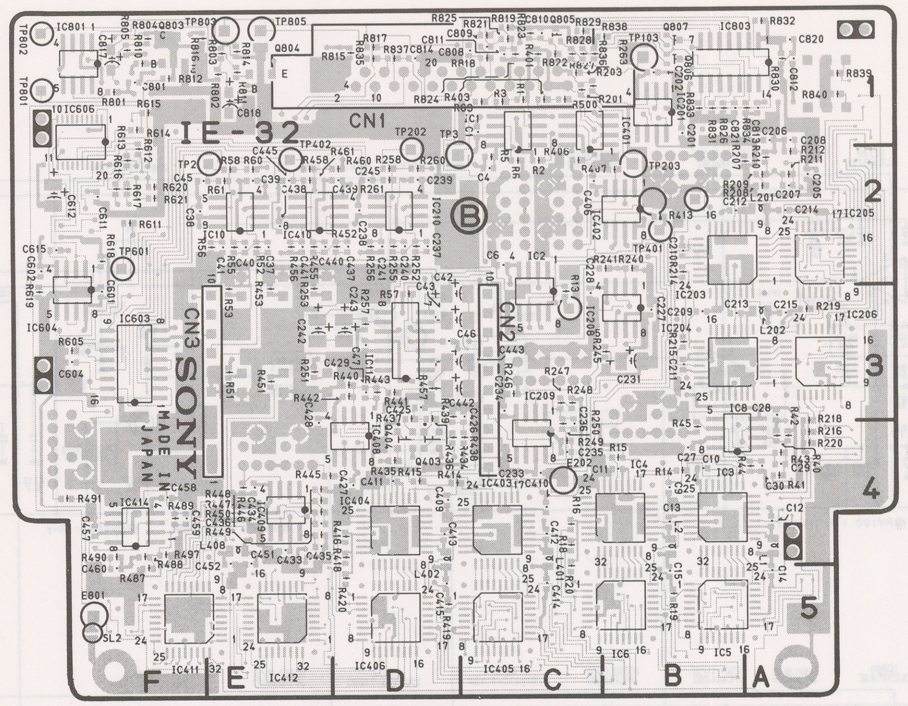

1-642-612-11 SOLDERING SIDE

IE-32 1-642-612-11

*Soldering Side

CN1	D-1
CN2	C-3
CN3	E-2
DL1	E-3
DL201	E-3
DL401	E-3
DL801	A-1
DL802	A-1
E201	B-2
E202	C-4
E801	F-5
FL1	C-2
FL2	B-3
FL201	B-1
FL202	C-3
FL401	C-2
FL402	E-4
FL403	F-4
*IC1	C-1
*IC2	C-2
*IC3	B-4
*IC4	B-4
*IC5	B-5
*IC6	B-5
IC7	B-5
*IC8	R-3
IC9	C-3
*IC10	E-2
*IC11	D-3
*IC201	B-1
IC202	A-1
*IC203	B-2
*IC204	B-3
*IC205	A-2
*IC206	A-3
IC207	A-2
*IC208	B-3
*IC209	C-3
*IC210	D-2
*IC401	D-1
*IC402	B-2
*IC403	C-4
*IC404	D-4
*IC405	C-5
*IC406	D-5
IC407	D-5
*IC408	D-4
*IC409	E-4
*IC410	E-2
*IC411	F-5
*IC412	E-5
IC413	E-4
*IC414	F-4
IC415	F-3
IC601	F-2
IC602	F-3
*IC603	F-3
*IC604	F-3
IC605	F-3
*IC606	F-1
IC607	F-2
*IC801	F-1
IC802	F-1
*IC803	B-1
IC804	B-2
Q1	B-4
Q2	B-4
Q3	A-4
Q4	B-4
Q5	C-2
Q201	B-2
Q202	B-3
Q203	B-2
Q204	B-3
Q205	D-2
Q401	C-4
Q402	D-4
*Q403	D-4
*Q404	D-4
Q405	D-2
Q406	F-4
Q407	F-5
Q408	F-4
Q409	F-5
*Q607	B-1
Q801	F-1
Q802	F-1
*Q803	E-1
*Q804	E-1
*Q805	C-1
*Q806	B-1
RV1	E-2
RV201	D-2
RV401	E-2
TP1	C-3
TP2	E-2
TP3	C-2
TP103	B-1
TP201	B-2
TP202	D-2
TP203	B-2
TP401	B-2
TP402	E-2
TP601	F-2
TP801	F-1
TP802	F-1
TP803	E-1
TP805	E-1

IE-32 BOARD

CLISP CONT OUT
LEVEL DEPEND OUT
DTL IN
VF DTL OUT
VF DTL IN
1
2
3
4
5

NOTE

NM : NO MOUNT

IE-32 BOARD
HDCA-50 (W.W)

B-¥HDCA50-IE32/M

IE-34 BOARD

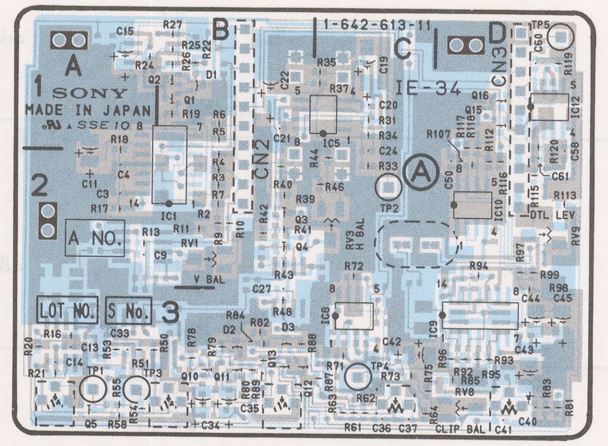
A
B
C
D
1
2
3
SONY
MADE IN JAPAN
1-642-613-11
IE-34
CN2
CN3
LOT NO.
S No.

1-642-613-11 COMPONENT SIDE

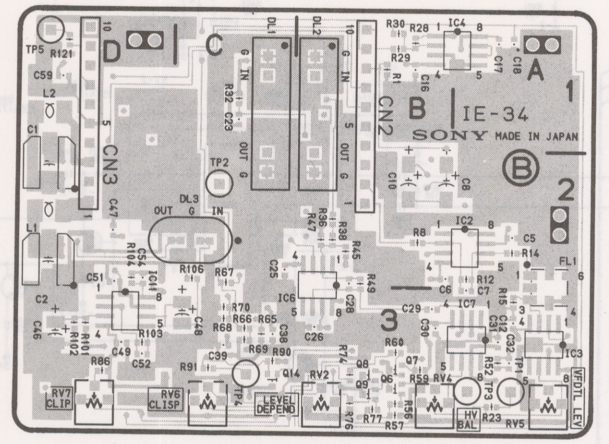
D
C
B
A
1
2
3
IE-34
SONY MADE IN JAPAN
CN2
CN3

1-642-613-11 SOLDERING SIDE

IE-34 BOARD

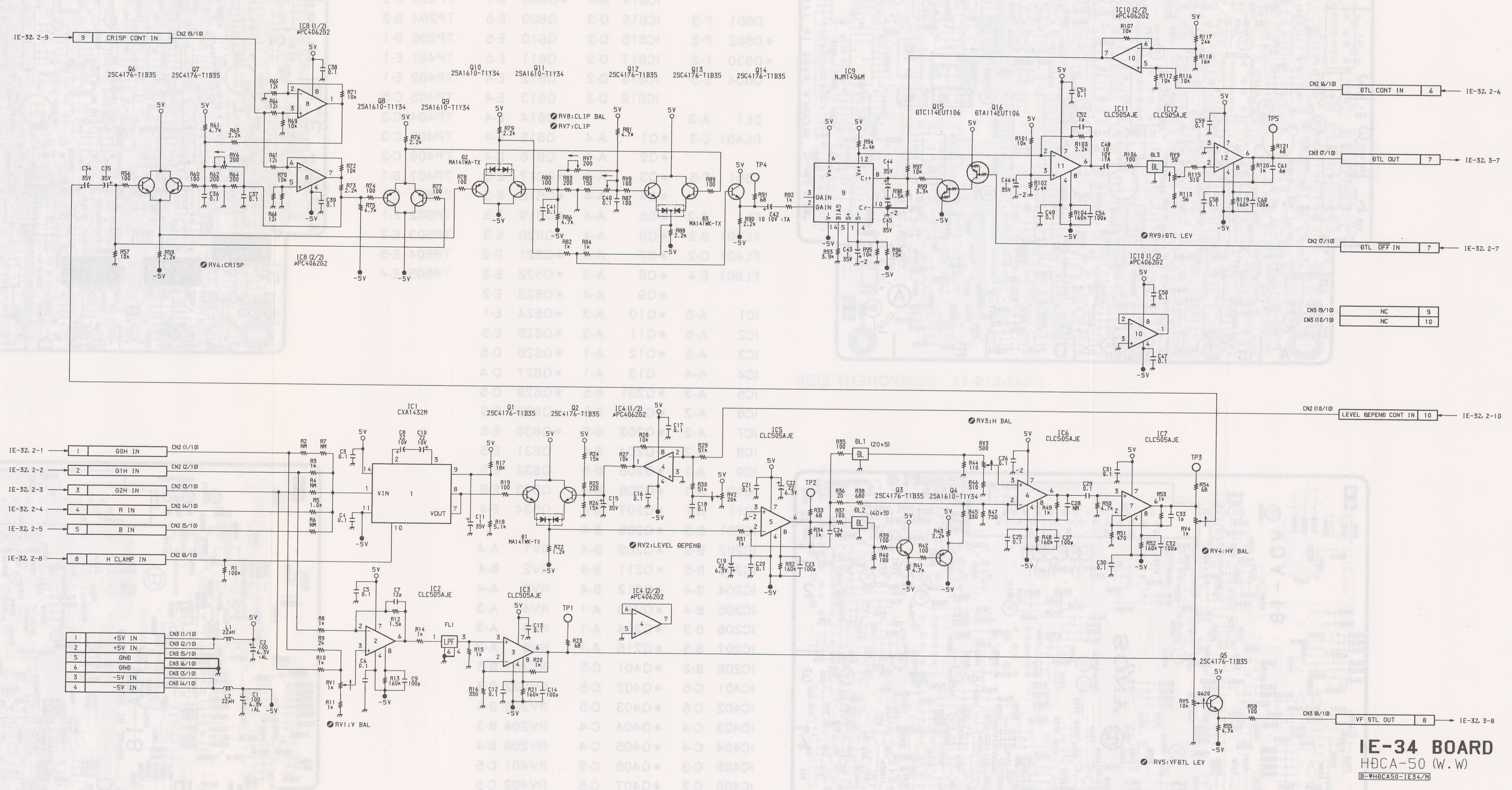
IE-32, 2-9
9 CRISP CONT IN
CN2 (9/10)
IC8 (1/2) μPC4062G2
IC8 (2/2) μPC4062G2
Q6 2SC4176-T1B35
Q7 2SC4176-T1B35
Q8 2SA1610-T1Y34
Q9 2SA1610-T1Y34
Q10 2SA1610-T1Y34
Q11 2SA1610-T1Y34
Q12 2SC4176-T1B35
Q13 2SC4176-T1B35
Q14 2SC4176-T1B35
D2 MA141WA-TX
D3 MA141WK-TX
RV6;CRISP
RV8;CLIP BAL
RV7;CLIP
TP4
IC9 NJM1496M
GAIN
GAIN
BIAS
Cr+
Cr-
Vo-
Vo+
Q15 DTC114EUT106
Q16 DTA114EUT106
IC10 (2/2) μPC4062G2
IC10 (1/2) μPC4062G2
IC11 CLC505AJE
IC12 CLC505AJE
DL3
RV9;DTL LEV
TP5
CN2 (6/10) DTL CONT IN 6 IE-32, 2-6
CN3 (7/10) DTL OUT 7 IE-32, 3-7
CN2 (7/10) DTL OFF IN 7 IE-32, 2-7
CN3 (9/10) NC 9
CN3 (10/10) NC 10
CN2 (10/10) LEVEL DEPEND CONT IN 10 IE-32, 2-10
IE-32, 2-1 1 G0H IN CN2 (1/10)
IE-32, 2-2 2 G1H IN CN2 (2/10)
IE-32, 2-3 3 G2H IN CN2 (3/10)
IE-32, 2-4 4 R IN CN2 (4/10)
IE-32, 2-5 5 B IN CN2 (5/10)
IE-32, 2-8 8 H CLAMP IN CN2 (8/10)
1 +5V IN CN3 (1/10)
2 +5V IN CN3 (2/10)
5 GND CN3 (5/10)
6 GND CN3 (6/10)
3 -5V IN CN3 (3/10)
4 -5V IN CN3 (4/10)
L1 22μH
L2 22μH
IC1 CXA1432M
VIN
VOUT
Q1 2SC4176-T1B35
Q2 2SC4176-T1B35
D1 MA141WK-TX
IC4 (1/2) μPC4062G2
IC4 (2/2) μPC4062G2
RV2:LEVEL DEPEND
IC2 CLC505AJE
IC3 CLC505AJE
FL1 LPF
TP1
RV1;V BAL
IC5 CLC505AJE
TP2
DL1 (20nS)
DL2 (40nS)
Q3 2SC4176-T1B35
Q4 2SA1610-T1Y34
RV3;H BAL
IC6 CLC505AJE
IC7 CLC505AJE
TP3
RV4:HV BAL
Q5 2SC4176-T1B35
RV5:VFDTL LEV
CN3 (8/10) VF DTL OUT 8 IE-32, 3-8

IE-34 BOARD
HDCA-50 (W.W)
B-¥HDCA50-IE34/M

VDA-18 BOARD

Serial No. 10001 – 10100

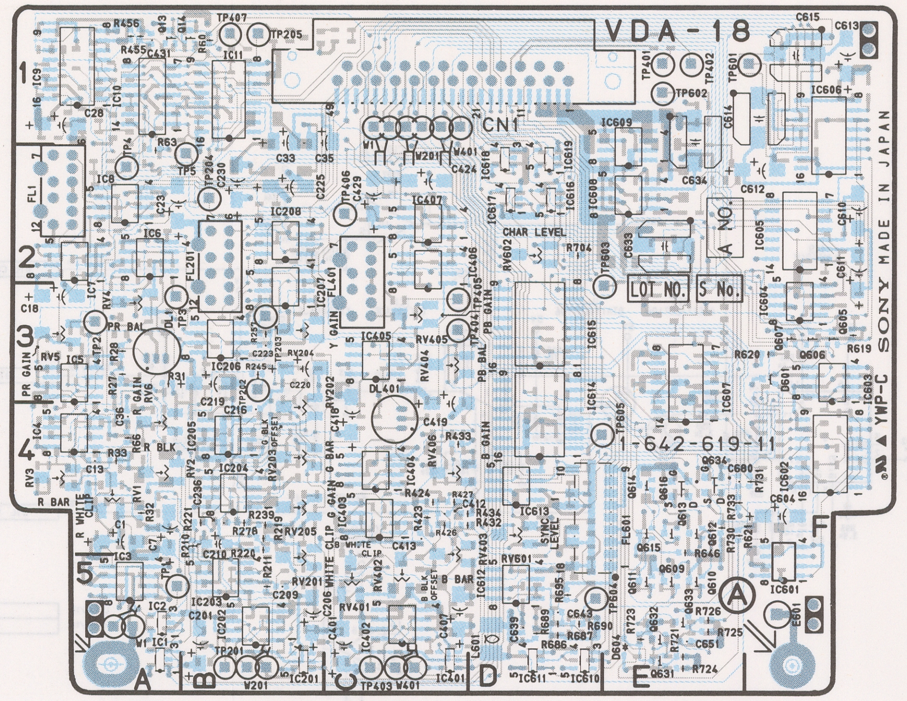

1-642-619-11 COMPONENT SIDE

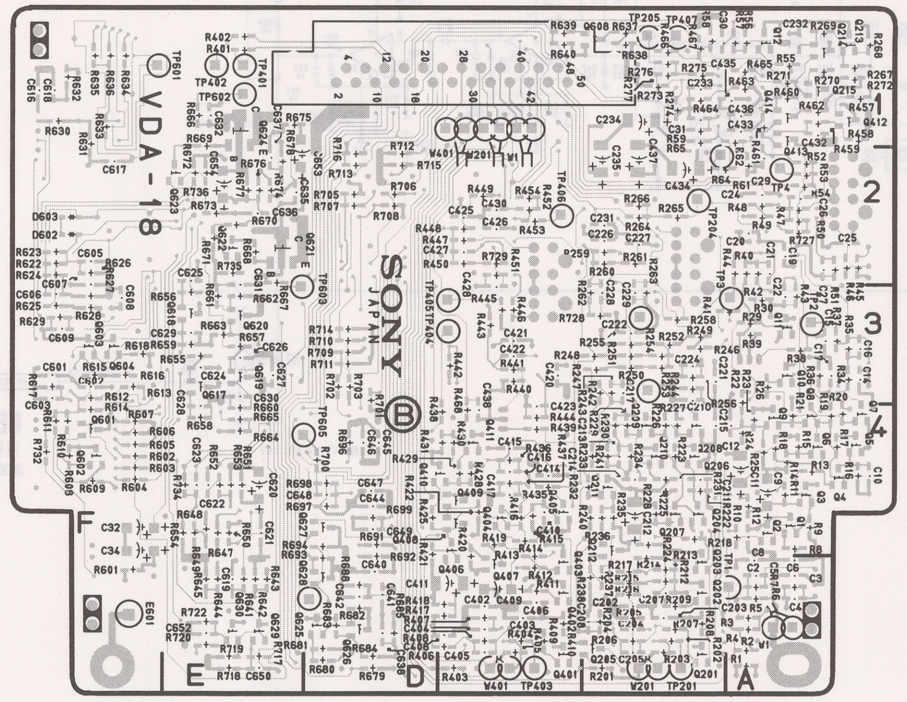

1-642-619-11 SOLDERING SIDE

VDA-18 1-642-619-11

*Soldering Side

CN1	D-1	IC613	D-4	Q607	F-3	TP202	B-3
		IC614	D-4	*Q608	B-1	TP203	B-3
D601	F-3	IC615	D-3	Q609	E-5	TP204	B-2
*D602	F-2	IC616	D-2	Q610	E-5	TP205	B-1
*D630	F-2	IC617	D-2	Q611	E-5	TP401	E-1
D604	E-5	IC618	D-2	Q612	E-4	TP402	E-1
		IC619	D-2	Q613	E-4	TP403	C-5
DL1	A-3			Q614	E-4	TP404	C-3
DL401	C-3	*Q1	A-4	Q615	E-4	TP405	C-3
		*Q2	A-4	Q616	E-4	TP406	C-2
E601	F-5	*Q3	A-4	*Q617	E-3	TP407	B-1
		*Q4	A-4	*Q618	E-3	TP601	E-1
FL1	A-2	*Q5	A-4	*Q619	E-3	TP602	E-1
FL201	B-2	*Q6	A-4	*Q620	E-3	TP603	E-2
FL401	C-2	*Q7	A-4	*Q621	D-2	TP604	E-5
FL601	E-4	*Q8	A-3	*Q622	E-2	TP605	E-4
		*Q9	A-4	*Q623	E-2		
IC1	A-5	*Q10	A-3	*Q624	E-1		
IC2	A-5	*Q11	A-3	*Q625	E-5		
IC3	A-5	*Q12	A-1	*Q626	D-5		
IC4	A-4	Q13	A-1	*Q627	D-4		
IC5	A-3	*Q201	B-5	*Q628	D-5		
IC6	A-2	*Q202	B-5	*Q629	E-5		
IC7	A-2	*Q203	B-5	*Q630	E-5		
IC8	A-2	*Q204	B-4	Q631	E-5		
IC9	A-1	*Q205	B-5	Q632	E-5		
IC10	A-1	*Q206	B-4	Q633	E-5		
IC11	B-1	*Q207	B-4	Q634	E-4		
IC201	B-5	*Q208	B-4				
IC202	B-5	*Q209	B-4	RV1	A-4		
IC203	B-5	*Q211	B-4	RV2	B-4		
IC204	B-4	*Q212	B-4	RV3	A-4		
IC205	B-4	*Q213	A-1	RV4	A-3		
IC206	B-3	*Q214	A-1	RV5	A-3		
IC207	B-3	*Q215	A-1	RV6	A-3		
IC208	B-2	*Q401	C-5	RV201	B-5		
IC401	C-5	*Q402	C-5	RV202	C-3		
IC402	C-5	*Q403	C-5	RV203	B-4		
IC403	C-4	*Q404	C-4	RV204	B-3		
IC404	C-4	*Q405	C-4	RV205	B-4		
IC405	C-3	*Q406	C-5	RV401	C-5		
IC406	C-2	*Q407	C-5	RV402	C-5		
IC407	C-2	*Q408	D-4	RV403	D-4		
IC601	F-5	*Q409	C-4	RV404	C-3		
IC602	F-4	*Q410	D-4	RV405	C-3		
IC603	F-3	*Q411	C-4	RV406	C-4		
IC604	F-3	*Q412	A-1	RV601	D-5		
IC605	F-2	*Q413	A-2	RV602	D-2		
IC606	F-1	*Q414	A-1				
IC607	E-3	*Q601	F-4	TP1	A-5		
IC608	E-2	*Q602	F-4	TP2	A-3		
IC609	E-1	*Q603	F-3	TP3	A-3		
IC610	D-5	*Q604	F-3	TP4	A-2		
IC611	D-5	Q605	F-3	TP5	A-2		
IC612	D-5	Q606	F-3	TP201	B-5		

Serial No. 10101 –

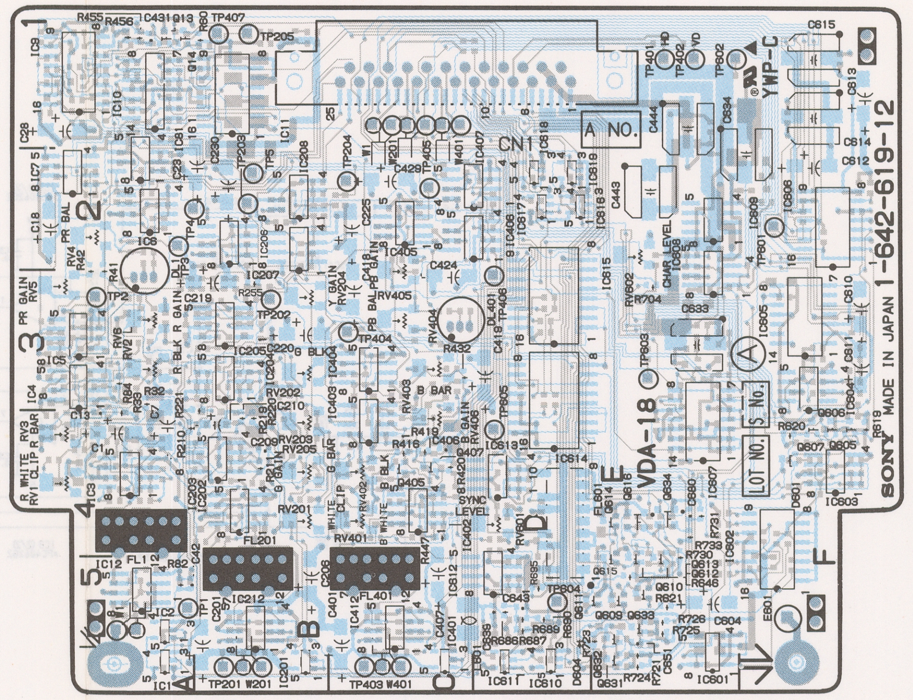

1-642-619-12 COMPONENT SIDE

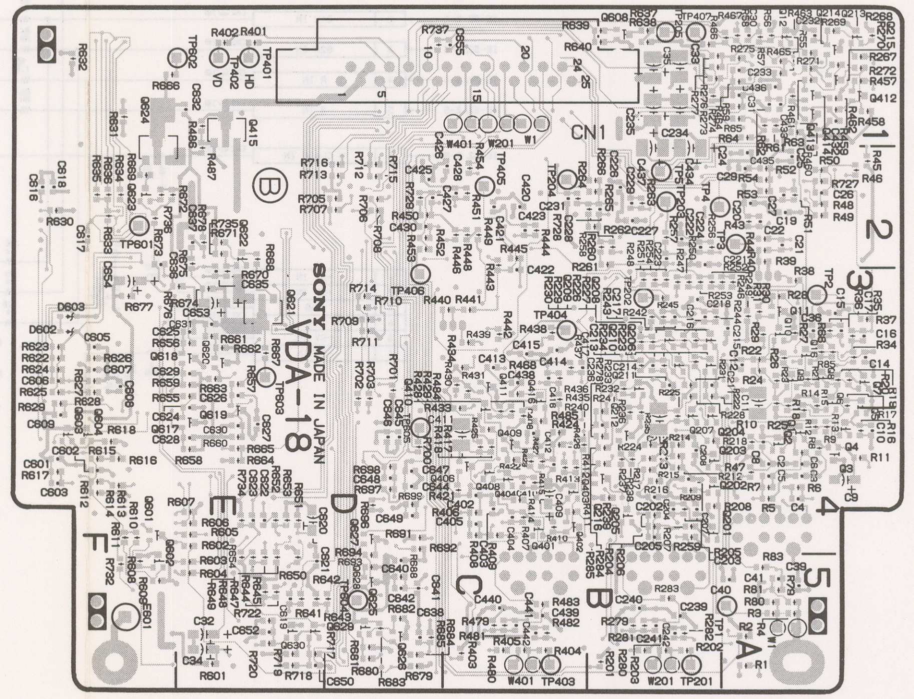

1-642-619-12 SOLDERING SIDE

VDA-18 1-642-619-12

*Soldering Side

CN1	D-1	IC610	D-5	*Q414	A-1	RV601	D-4
		IC611	D-5	*Q415	E-1	RV602	E-3
D601	F-4	IC612	D-5	*Q416	C-3		
*D602	F-3	IC613	D-4	*Q601	F-4	TP1	A-5
*D603	F-3	IC614	D-4	*Q602	F-5	TP2	A-3
D604	D-5	IC615	D-3	*Q603	F-4	TP3	A-2
		IC616	D-2	*Q604	F-4	TP4	A-2
DL1	A-3	IC617	D-2	Q605	F-4	TP5	B-2
DL401	D-3	IC618	D-2	Q606	F-4	TP201	B-5
		IC619	D-2	Q607	F-4	TP202	B-3
E601	F-5			*Q608	B-1	TP203	B-2
		*Q1	A-4	Q609	E-5	TP204	C-2
FL1	A-5	*Q2	A-4	Q610	E-5	TP205	B-1
FL201	B-4	*Q3	A-4	Q611	D-5	TP401	E-1
FL401	C-5	*Q4	A-4	Q612	E-5	TP402	E-1
FL601	E-4	*Q5	A-4	Q613	E-5	TP403	C-5
		*Q6	A-3	Q614	E-4	TP404	C-3
IC1	A-5	*Q7	A-3	Q615	E-5	TP405	C-2
IC2	A-5	*Q8	A-3	Q616	E-4	TP406	D-3
IC3	A-4	*Q9	A-3	*Q617	E-4	TP407	B-1
IC4	A-3	*Q10	A-3	*Q618	E-3	TP601	F-2
IC5	A-3	*Q11	A-3	*Q619	E-4	TP602	E-1
IC6	A-2	*Q12	A-1	*Q620	E-3	TP603	E-3
IC7	A-2	Q13	A-1	*Q621	E-3	TP604	D-5
IC8	A-2	Q14	A-1	*Q622	E-2	TP605	D-4
IC9	A-1	*Q16	A-3	*Q623	F-2		
IC10	A-1	*Q201	B-4	*Q624	F-1		
IC11	B-1	*Q202	B-4	*Q625	D-5		
IC12	A-5	*Q203	B-4	*Q626	D-5		
IC201	B-5	*Q204	B-4	*Q627	D-4		
IC202	B-4	*Q205	B-4	*Q628	D-5		
IC203	A-4	*Q206	B-3	*Q629	E-5		
IC204	B-3	*Q207	B-4	*Q630	E-5		
IC205	B-3	*Q208	B-3	Q631	E-5		
IC206	B-2	*Q209	C-3	Q632	E-5		
IC207	B-3	*Q210	B-3	Q633	E-5		
IC208	B-2	*Q211	B-3	Q634	E-4		
IC212	B-5	*Q212	B-4				
IC401	C-5	*Q213	A-1	RV1	A-4		
IC402	C-4	*Q214	A-1	RV2	A-3		
IC403	C-3	*Q215	A-1	RV3	A-4		
IC404	C-3	*Q216	B-4	RV4	A-2		
IC405	C-2	*Q401	C-4	RV5	A-3		
IC406	D-2	*Q402	C-4	RV6	A-3		
IC407	D-2	*Q403	C-4	RV201	B-4		
IC412	C-5	*Q404	C-4	RV202	B-3		
IC601	E-5	Q405	C-4	RV203	B-4		
IC602	F-4	*Q406	C-4	RV204	B-3		
IC603	F-4	Q407	C-5	RV205	B-4		
IC604	F-3	*Q408	C-4	RV401	C-4		
IC605	F-3	*Q409	C-4	RV402	C-4		
IC606	F-2	*Q410	D-3	RV403	C-3		
IC607	E-4	*Q411	C-3	RV404	C-3		
IC608	E-2	*Q412	A-1	RV405	C-3		
IC609	F-2	*Q413	A-1	RV406	C-4		

VDA-18 BOARD

IE-32, 1-25
26 VF DTL IN
CN1 (26/50)
IE-32, 1-37
38 R IE VIDEO IN
CN1 (38/50)
36 R IE VIDEO GND
CN1 (36/50)
SG, 1-30
29 R BAR IN
CN1 (29/50)
IE-32, 1-33
34 G IE VIDEO IN
CN1 (34/50)
32 G IE VIDEO GND
CN1 (32/50)
SG, 1-28
27 G BAR IN
CN1 (27/50)
SG, 1-12
12 H CLAMP IN
CN1 (12/50)
SG, 1-14
14 VD IN
CN1 (14/50)
IE-32, 1-29
30 B IE VIDEO IN
CN1 (30/50)
28 B IE VIDEO GND
CN1 (28/50)
SG, 1-26
25 B BAR IN
CN1 (25/50)
SG, 1-13
13 SYS BLKG IN
CN1 (13/50)
SG, 1-36
35 SYNC IN
CN1 (35/50)
IC1 TC7S00F-TE85L
IC2 TC7S08F-TE85L
IC201 TC7S08F-TE85L
IC401 TC7S08F-TE85L
TP1
TP201
TP401
TP402
TP403
W1
W201
W401
RV1 R WHITE CLIP
RV2 R BLK OFFSET
RV3 R BAR
RV201 G WHITE CLIP
RV202 G BLK OFFSET
RV203 G GAIN
RV401 B WHITE CLIP
RV402 B BLK OFFSET
RV403 B BAR
RV404 B GAIN
RV5 R GAIN
RV405 PB GAIN
RV601 SYNC LEVEL
RV602 CHAR LEVEL
HDCA-50 : SERIAL NO. 10001-15100
CN1 (17/50) WINDOW IN 17 SG, 1-18
CN1 (15/50) DVD IN 15 SG, 1-16
CN1 (31/50) RET VIDEO IN 31 MB, CN36
CN1 (33/50) RET VIDEO IN GND 33
CN107
VF CN103 (EXT VIEW)
CN1 (39/50) CHU VF OUT 39 MB, 14-11A
CN1 (40/50) CHU VF GND 40
CN1 (6/50) UNREG IN 6
CN1 (8/50) UNREG IN 8
CN1 (43/50) VF OUT 43 MB, 15-A4
CN1 (41/50) MONITOR OUT 41 MB, CN35
CN1 (45/50) VF/MON GND 45
CN1 (48/50) R VIDEO OUT 48 MB, CN32
CN1 (46/50) R VIDEO GND 46
CN1 (49/50) G VIDEO OUT 49 MB, CN33
CN1 (47/50) G VIDEO GND 47
CN1 (44/50) B VIDEO OUT 44 MB, CN34
CN1 (42/50) B VIDEO GND 42
IC608 (2/2) μPC4062G2
CN1 (20/50) R AT-VID OUT 20 IF, 1-21
CN1 (18/50) G AT-VID OUT 18 IF, 1-19
CN1 (16/50) B AT-VID OUT 16 IF, 1-17
CN1 (5/50) +5.5V IN 5
CN1 (7/50) +5.5V IN 7
IC609 REF-03GS
E601
CN1 (2/50) GND 2
CN1 (4/50) GND 4
CN1 (50/50) GND 50
CN1 (1/50) -5.5V IN 1
CN1 (3/50) -5.5V IN 3
IC618 TC7S02F-TE85L
A:SG B:IF
CN1 (23/50) VF DISP-A IN 23 SG, 1-24
CN1 (24/50) VF DISP-B IN 24 IF, 1-22
CN1 (22/50) VF BLK DISP-B IN 22 IF, 1-20
CN1 (21/50) VF BLK DISP-A IN 21 SG, 1-22
IC619 TC7S02F-TE85L
CN1 (19/50) ZEBRA IN 19 SG, 1-20
IC615 PCF8574T
CN1 (10/50) SERIAL DATA OUT 10 IF, 1-10
CN1 (9/50) SYSTEM CLOCK OUT 9 IF, 1-9
CN1 (11/50) DIAG SAMPLE IN 11 NO USE
UNREG 6
UNREG 8
1
2
3
4
5

VDA-18 BOARD
HDCA-50 (W.W)
B-¥HDCA50-VDA18/M

SG-190 BOARD

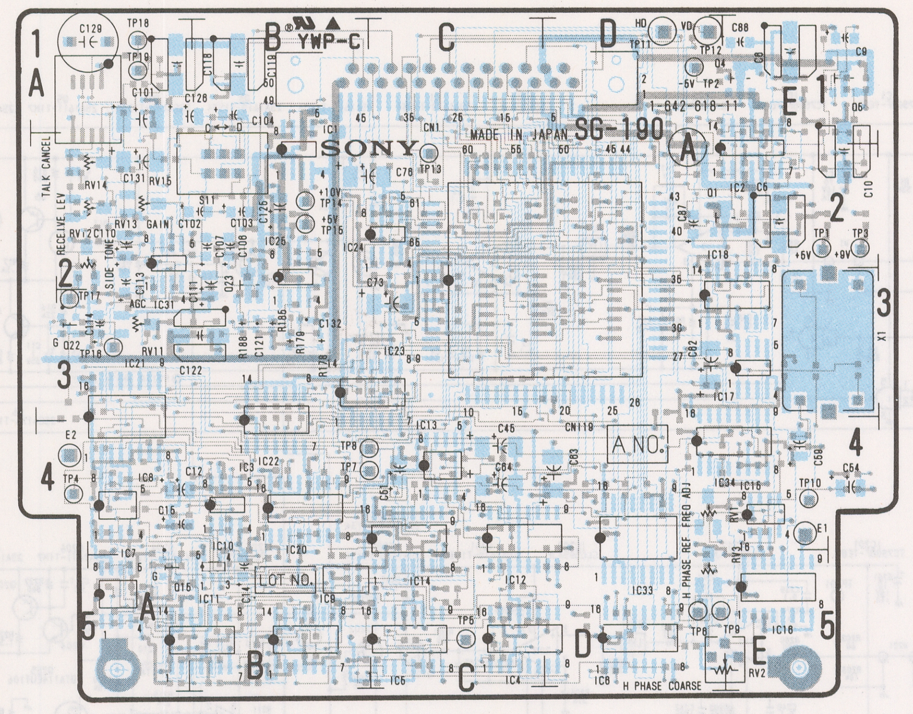
1-642-618-11 COMPONENT SIDE

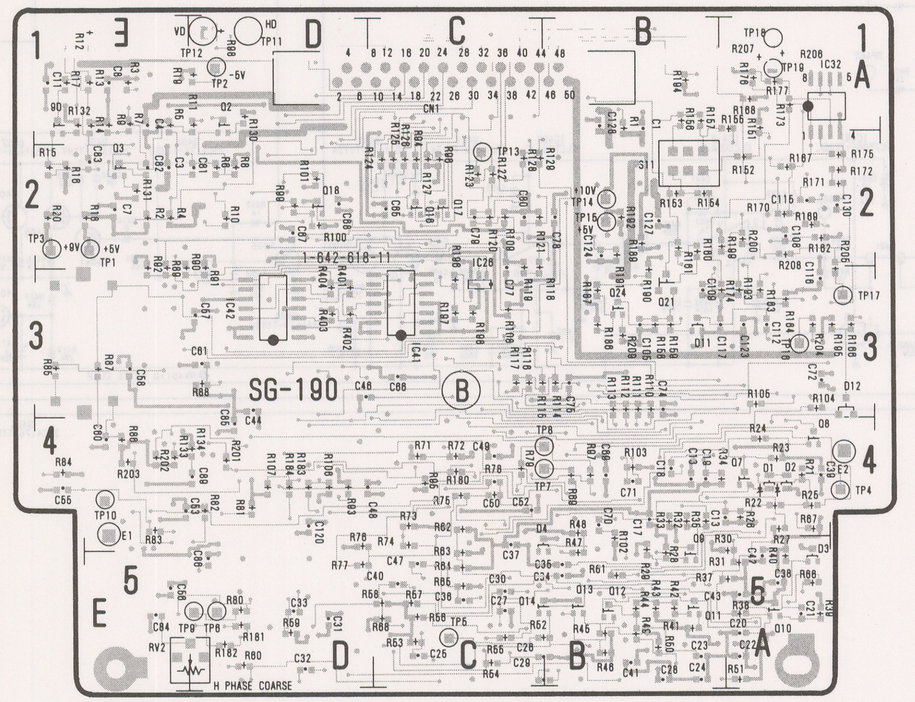
1-642-618-11 SOLDERING SIDE

SG-190 1-642-618-11

∗Soldering Side

CN1	C-1
∗D1	A-4
∗D2	A-4
∗D3	A-5
∗D4	C-5
∗D11	B-3
∗D12	A-3
E1	E-4
E2	A-4
IC1	B-2
IC2	E-2
IC3	B-4
IC4	C-5
IC5	C-5
IC6	D-5
IC7	A-5
IC8	A-4
IC9	B-5
IC10	B-4
IC11	B-5
IC12	C-4
IC13	C-4
IC14	C-4
IC15	E-4
IC16	E-5
IC17	E-3
IC18	D-3
IC20	B-4
IC21	A-3
IC22	B-4
IC23	C-3
IC24	C-2
IC25	B-2
∗IC26	C-3
IC31	A-2
∗IC32	A-1
IC33	D-5
IC34	D-4
∗IC41	C-3
∗IC42	D-3
Q1	D-2
∗Q2	D-1
∗Q3	E-2
Q4	E-1
Q5	E-1
∗Q6	E-1
∗Q7	A-4
∗Q8	A-4
∗Q9	B-5
∗Q10	A-5
∗Q11	B-5
∗Q12	B-5
∗Q13	B-5
∗Q14	C-5
Q15	A-5
∗Q16	C-2
∗Q17	C-2
∗Q18	D-2
∗Q21	B-3
Q22	A-3
Q23	B-2
∗Q24	B-3
RV1	D-4
RV2	E-5
RV3	D-5
RV11	A-3
RV12	A-2
RV13	A-2
RV14	A-2
RV15	A-2
S11	B-2
TP1	E-2
TP2	D-1
TP3	E-2
TP4	A-4
TP5	C-5
TP6	D-5
TP7	B-4
TP8	B-4
TP9	D-5
TP10	E-4
TP11	D-1
TP12	D-1
TP13	C-2
TP14	B-2
TP15	B-2
TP16	A-3
TP17	A-3
TP18	A-1
TP19	A-1
X1	E-3

SG-190 BOARD

RV3:H PHASE REF
RV2:H PHASE COARSE
RV1:FREQ ADJ
RV11:AGC
RV15:GAIN
RV12:SIDE TONE
RV13:RECEIVE LEVEL
RV14:TALK CANCEL
INCOM LEVEL

NOTE

*1

REF.NO	CHANGE INFORMATION	SERIAL NO.
C110	10/10V ---> 6.8/16V	10100 and higher

NOTE

NM : NO MOUNT

SG-190 BOARD

HDCA-50 (W.W)

B-¥HDCA50-SG190/M

IF-346 BOARD

Serial No. 10001 – 10100

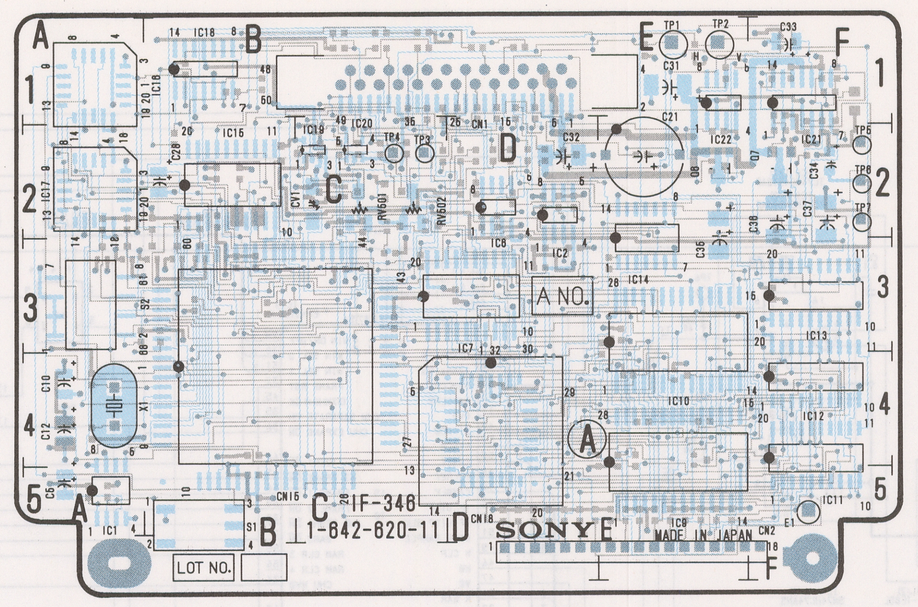
A
B
C
D
E
F
1
2
3
4
5
A NO.
Ⓐ
IF-346
1-642-620-11
SONY
MADE IN JAPAN
LOT NO.

1-642-620-11 COMPONENT SIDE

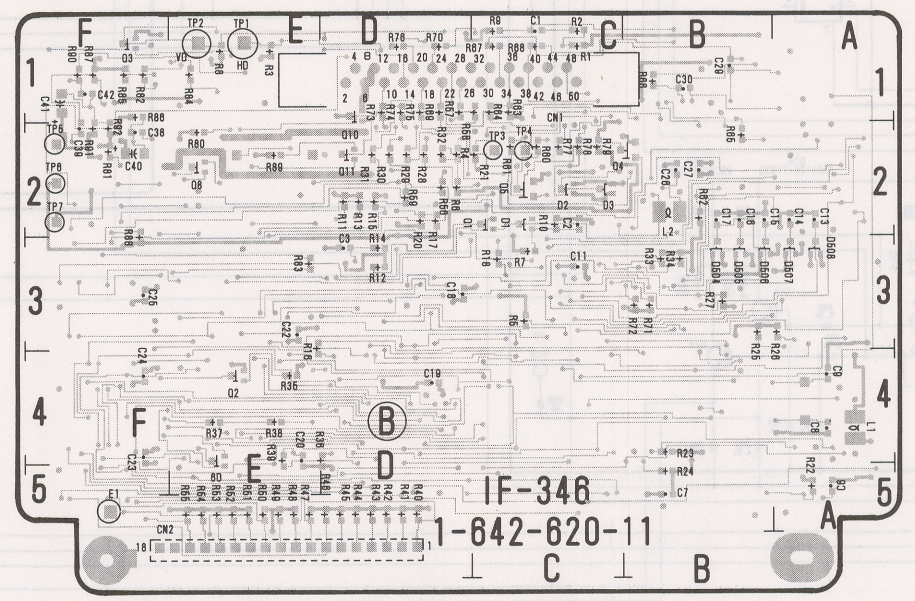
F
E
D
C
B
A
1
2
3
4
5
Ⓑ
IF-346
1-642-620-11

1-642-620-11 SOLDERING SIDE

IF-346 1-642-620-11

*Soldering Side

CN1	D-1	TP4	C-2
CN2	F-5	TP5	F-2
		TP6	F-2
CV1	C-2	TP7	F-2
*D1	C-2	X1	A-4
*D2	C-2		
*D3	C-2		
*D504	B-3		
*D505	B-3		
*D506	B-3		
*D507	A-3		
*D508	A-3		
E1	F-5		
IC1	A-5		
IC2	D-2		
IC6	D-2		
IC7	D-3		
IC9	E-5		
IC10	E-4		
IC11	F-5		
IC12	F-4		
IC13	F-3		
IC14	E-3		
IC15	B-2		
IC16	A-1		
IC17	A-2		
IC18	B-1		
IC19	C-2		
IC20	C-2		
IC21	F-1		
IC22	E-1		
*Q1	D-2		
*Q2	E-4		
*Q3	F-1		
*Q4	E-2		
*Q5	C-2		
Q6	E-2		
*Q8	E-2		
*Q9	E-5		
*Q10	D-2		
*Q11	D-2		
RV501	C-2		
RV502	C-2		
S1	B-5		
S2	A-3		
TP1	E-1		
TP2	E-1		
TP3	C-2		

Serial No. 10101 –

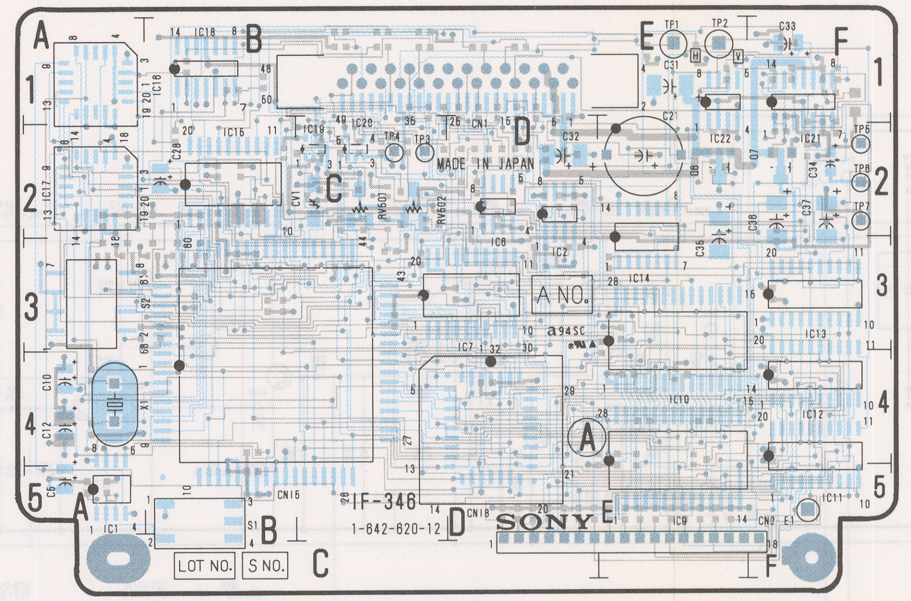
A
B
C
D
E
F
1
2
3
4
5
A NO.
Ⓐ
IF-346
1-642-620-12
SONY
MADE IN JAPAN
LOT NO.
S NO.

1-642-620-12 COMPONENT SIDE

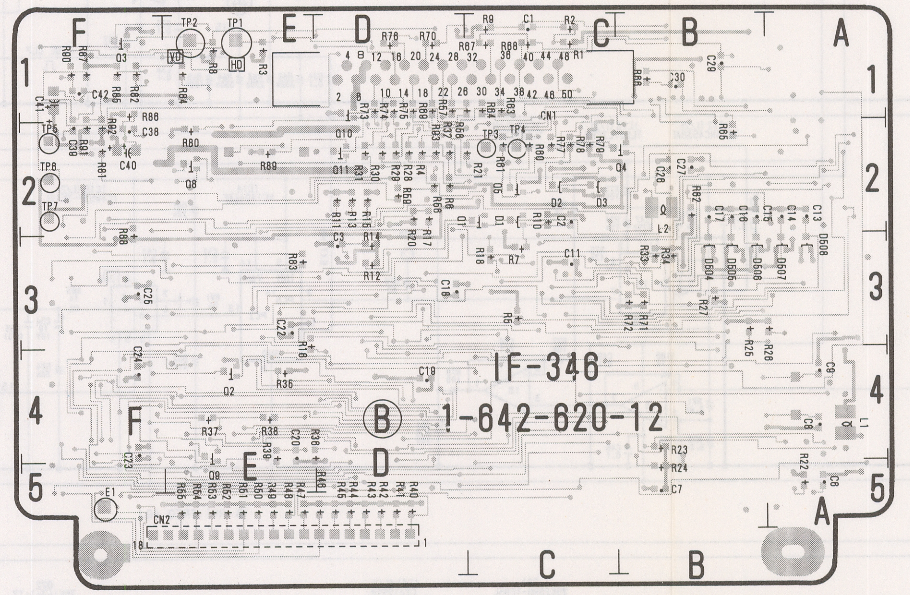
F
E
D
C
B
A
1
2
3
4
5
Ⓑ
IF-346
1-642-620-12

1-642-620-12 SOLDERING SIDE

IF-346 1-642-620-12

*Soldering Side

CN1	D-1	TP4	C-2
CN2	F-5	TP5	F-2
		TP6	F-2
CV1	C-2	TP7	F-2
*D1	C-2	X1	A-4
*D2	C-2		
*D3	C-2		
*D504	B-3		
*D505	B-3		
*D506	B-3		
*D507	A-3		
*D508	A-3		
E1	F-5		
IC1	A-5		
IC2	D-2		
IC6	D-2		
IC7	D-3		
IC9	E-5		
IC10	E-4		
IC11	F-5		
IC12	F-4		
IC13	F-3		
IC14	E-3		
IC15	B-2		
IC16	A-1		
IC17	A-2		
IC18	B-1		
IC19	C-2		
IC20	C-2		
IC21	F-1		
IC22	E-1		
*Q1	D-2		
*Q2	E-4		
*Q3	F-1		
*Q4	B-2		
*Q5	C-2		
Q6	E-2		
*Q8	E-2		
*Q9	E-5		
*Q10	D-2		
*Q11	D-2		
RV501	C-2		
RV502	C-2		
S1	B-5		
S2	A-3		
TP1	E-1		
TP2	E-1		
TP3	C-2		

SW-489 BOARD

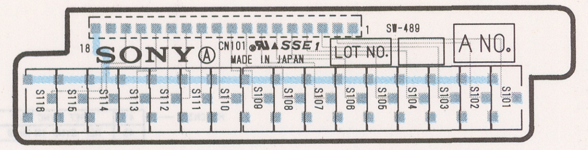
SONY
MADE IN JAPAN
LOT NO.
A NO.

1-642-621-11 COMPONENT SIDE

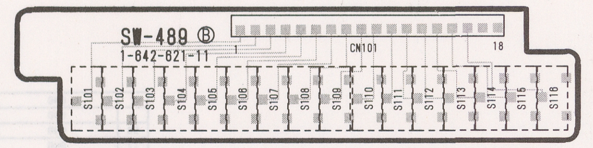
SW-489
1-642-621-11

1-642-621-11 SOLDERING SIDE

IF-346 BOARD
SW-489 BOARD

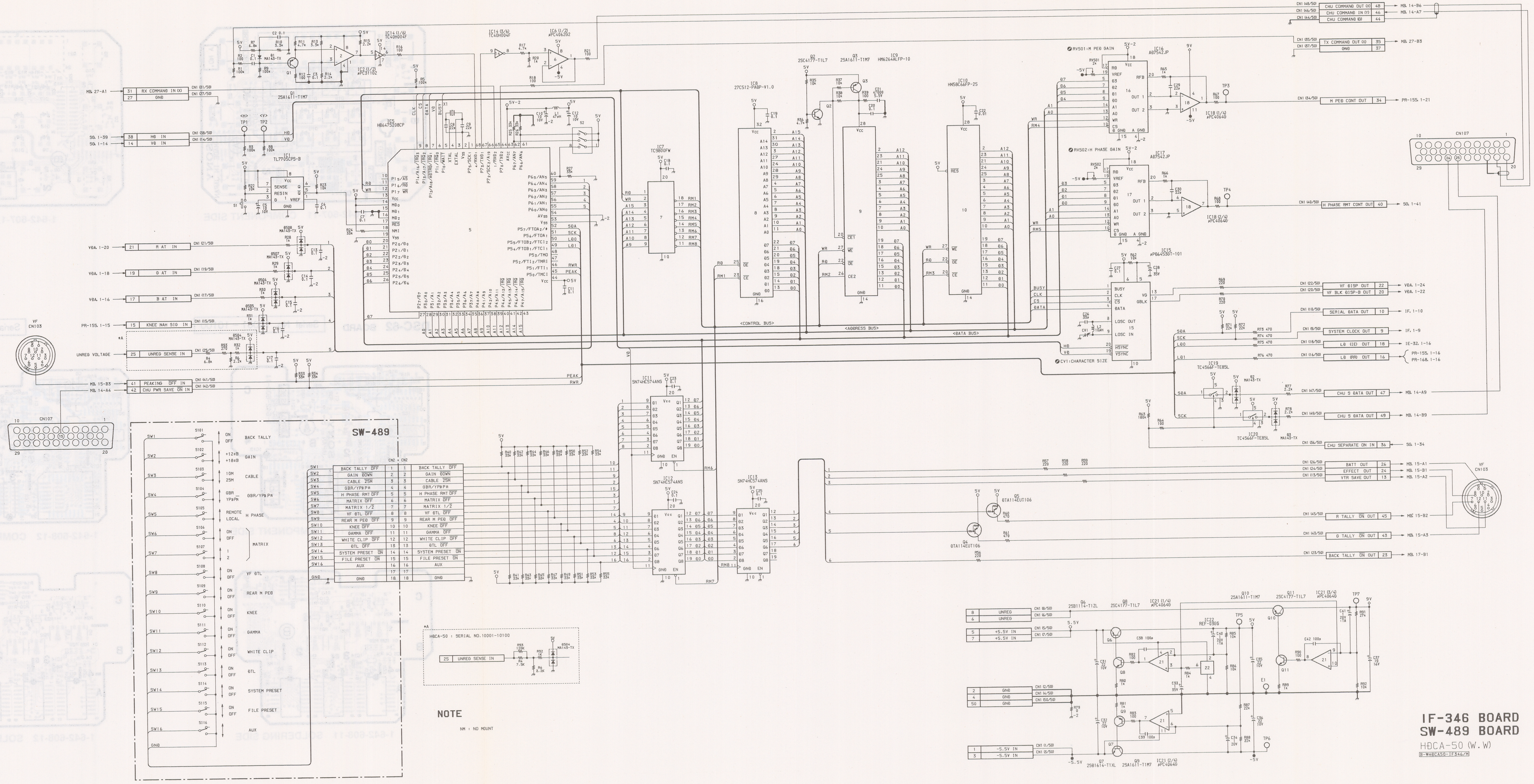
MB. 27-A1
31 RX COMMAND IN (X)
27 GND
SG. 1-39
SG. 1-14
38 HD IN
14 VD IN
VDA. 1-20
21 R AT IN
VDA. 1-18
19 G AT IN
VDA. 1-16
17 B AT IN
PR-155. 1-15
15 KNEE MAN SIG IN
UNREG VOLTAGE
25 UNREG SENSE IN
MB. 15-B3
MB. 14-A4
41 PEAKING OFF IN
42 CHU PWR SAVE ON IN
CN1 (41/50)
CN1 (42/50)
VF CN103
CN107
IC5 HD64F3298CP
IC7 TC9800FW
IC8 27C512-PA8P-V1.0
IC9 HM6264ALFP-10
IC10 HM58C66FP-25
IC11 SN74HC574ANS
IC12 SN74HC574ANS
IC13 SN74HC574ANS
IC14 AD7542JP
IC16 AD7542JP
IC15 μPD6450GT-101
<CONTROL BUS>
<ADDRESS BUS>
<DATA BUS>
RV501:M PED GAIN
RV502:H PHASE GAIN
CV1:CHARACTER SIZE
SW-489
S101 SW1 ON OFF BACK TALLY
S102 SW2 +12dB +18dB GAIN
S103 SW3 10M 25M CABLE
S104 SW4 GBR YPBPR GBR/YPBPR
S105 SW5 REMOTE LOCAL H PHASE
S106 SW6 ON OFF
S107 SW7 1 2 MATRIX
S108 SW8 ON OFF VF DTL
S109 SW9 ON OFF REAR M PED
S110 SW10 ON OFF KNEE
S111 SW11 ON OFF GAMMA
S112 SW12 ON OFF WHITE CLIP
S113 SW13 ON OFF DTL
S114 SW14 ON OFF SYSTEM PRESET
S115 SW15 ON OFF FILE PRESET
S116 SW16 ON OFF AUX
GND
CN2 CN2
BACK TALLY OFF 1
GAIN DOWN 2
CABLE 25M 3
GBR/YPBPR 4
H PHASE RMT OFF 5
MATRIX OFF 6
MATRIX 1/2 7
VF DTL OFF 8
REAR M PED OFF 9
KNEE OFF 10
GAMMA OFF 11
WHITE CLIP OFF 12
DTL OFF 13
SYSTEM PRESET ON 14
FILE PRESET ON 15
AUX 16
17
GND 18
CN1 (48/50) CHU COMMAND OUT (X) 48 MB. 14-B6
CN1 (46/50) CHU COMMAND IN (Y) 46 MB. 14-A7
CN1 (44/50) CHU COMMAND (G) 44
CN1 (35/50) TX COMMAND OUT (X) 35 MB. 27-B3
CN1 (37/50) GND 37
CN1 (34/50) M PED CONT OUT 34 PR-155. 1-21
CN1 (40/50) H PHASE RMT CONT OUT 40 SG. 1-41
CN1 (22/50) VF DISP OUT 22 VDA. 1-24
CN1 (20/50) VF BLK DISP-B OUT 20 VDA. 1-22
CN1 (10/50) SERIAL DATA OUT 10 IF. 1-10
CN1 (9/50) SYSTEM CLOCK OUT 9 IF. 1-9
CN1 (18/50) LD (IE) OUT 18 IE-32. 1-16
CN1 (16/50) LD (RR) OUT 16 PR-155. 1-16 PR-168. 1-16
CN1 (47/50) CHU S DATA OUT 47 MB. 14-A9
CN1 (49/50) CHU S DATA OUT 49 MB. 14-B9
CN1 (36/50) CHU SEPARATE ON IN 36 SG. 1-34
CN1 (26/50) BATT OUT 26 MB. 15-A1
CN1 (24/50) EFFECT OUT 24 MB. 15-B1
CN1 (13/50) VTR SAVE OUT 13 MB. 15-A2
CN1 (45/50) R TALLY ON OUT 45 MB. 15-B2
CN1 (43/50) G TALLY ON OUT 43 MB. 15-A3
CN1 (23/50) BACK TALLY ON OUT 23 MB. 17-B1
UNREG
+5.5V IN
GND
-5.5V IN
*A
HDCA-50 : SERIAL NO.10001-10100
25 UNREG SENSE IN
R93 120K
R4 7.5K
R32 1K
R6 2.2K
D504 MA143-TX
5V

NOTE

NM : NO MOUNT

IF-346 BOARD
SW-489 BOARD
HDCA-50 (W.W)
B-¥HDCA50-IF346/M

DP-158 BOARD

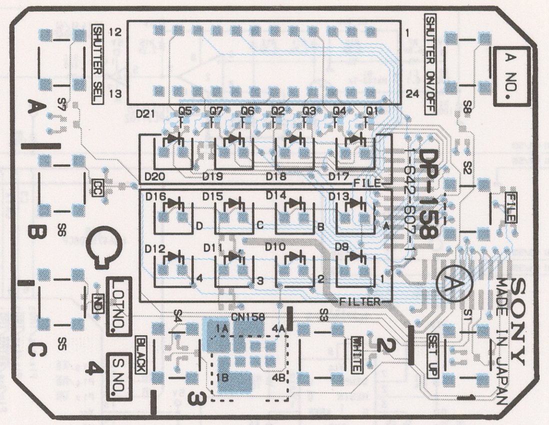
A
B
C
SONY
MADE IN JAPAN
DP-158
1
2
3
4

1-642-607-11 COMPONENT SIDE

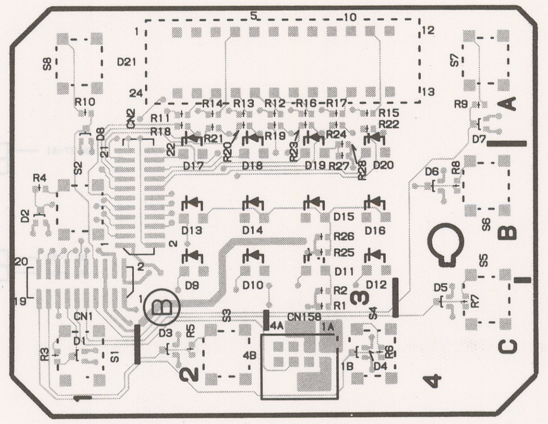

1-642-607-11 SOLDERING SIDE

DSC-62 BOARD

Serial No. 10001 – 10100

Serial No. 10101 –

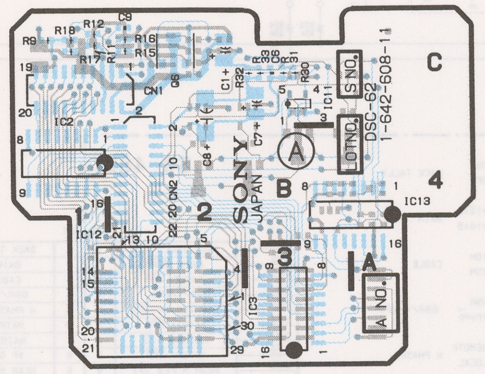
A
B
C
SONY
JAPAN
DSC-62
1-642-608-11
1
2
3
4

1-642-608-11 COMPONENT SIDE

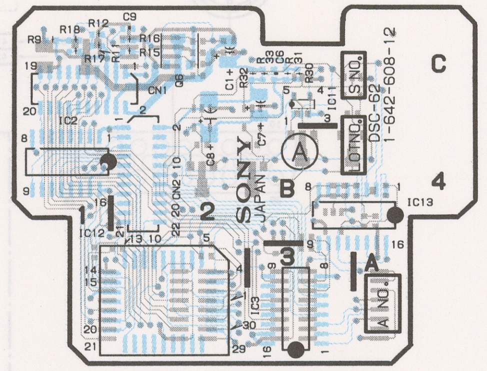
A
B
C
SONY
JAPAN
DSC-62
1-642-608-12
1
2
3
4

1-642-608-12 COMPONENT SIDE

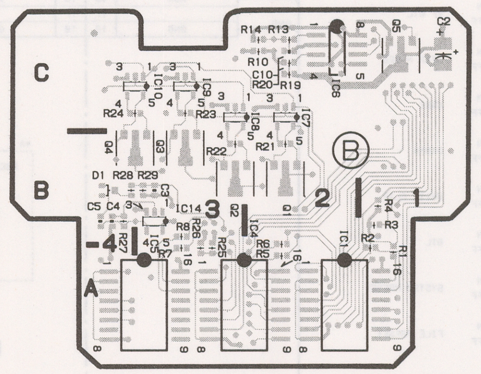

1-642-608-11 SOLDERING SIDE

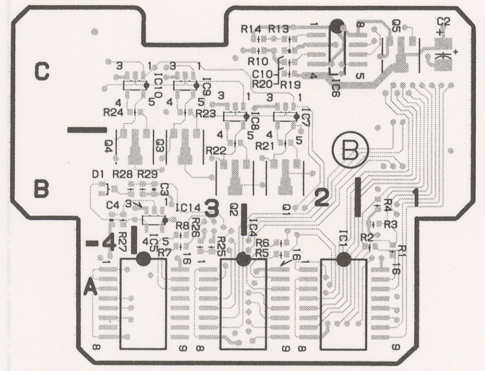

1-642-608-12 SOLDERING SIDE

DP-158 BOARD
DSC-62 BOARD

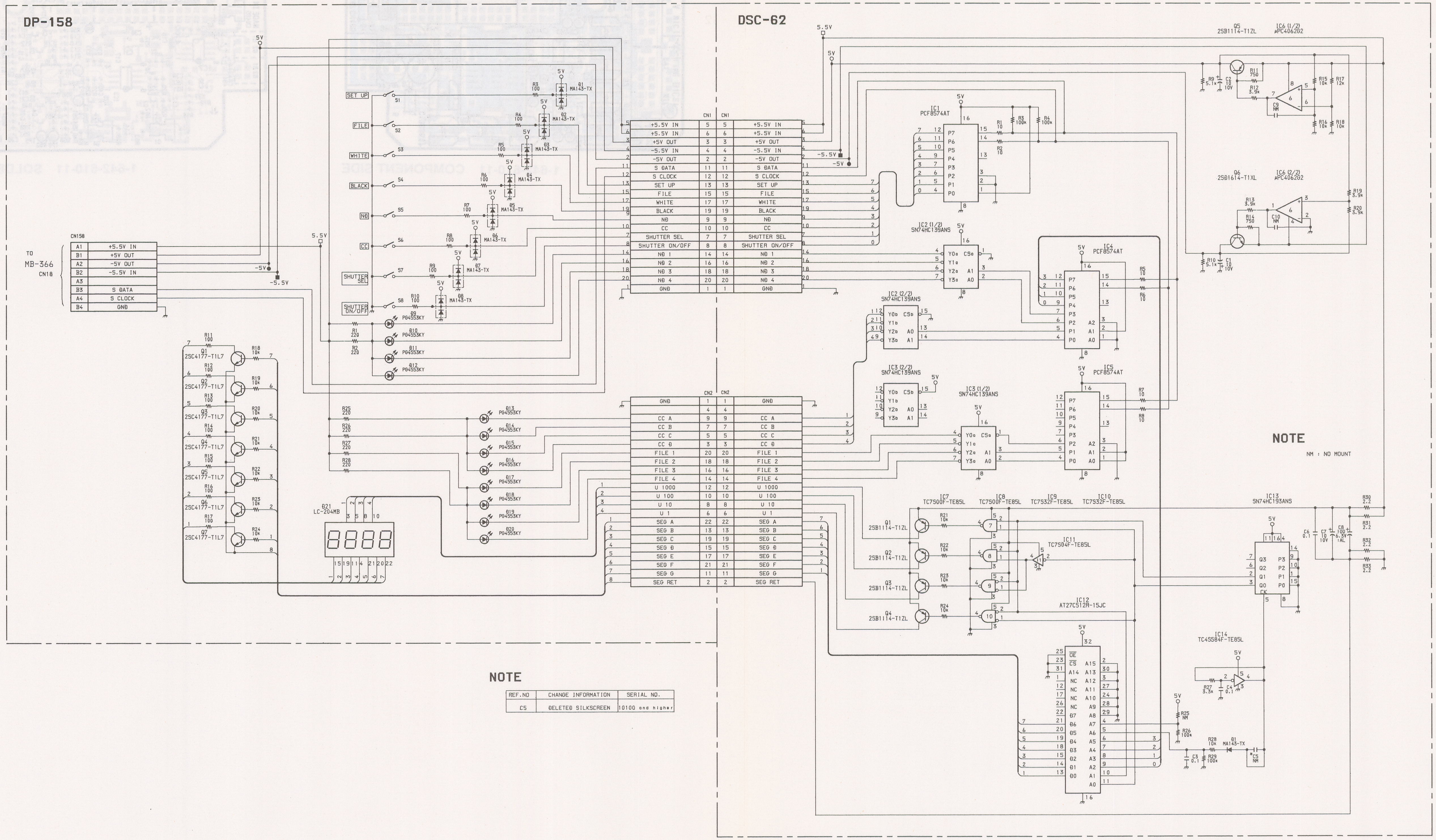
DP-158
DSC-62
TO MB-366 CN18
CN158
A1 +5.5V IN
B1 +5V OUT
A2 -5V OUT
B2 -5.5V IN
A3
B3 S DATA
A4 S CLOCK
B4 GND
5V
5.5V
-5V
-5.5V
SET UP
FILE
WHITE
BLACK
ND
CC
SHUTTER SEL
SHUTTER ON/OFF
S1
S2
S3
S4
S5
S6
S7
S8
MA143-TX
PG4553KY
CN1
+5.5V IN
+5.5V IN
+5V OUT
-5.5V IN
-5V OUT
S DATA
S CLOCK
SET UP
FILE
WHITE
BLACK
ND
CC
SHUTTER SEL
SHUTTER ON/OFF
ND 1
ND 2
ND 3
ND 4
GND
CN2
GND
CC A
CC B
CC C
CC D
FILE 1
FILE 2
FILE 3
FILE 4
U 1000
U 100
U 10
U 1
SEG A
SEG B
SEG C
SEG D
SEG E
SEG F
SEG G
SEG RET
Q1 2SC4177-T1L7
Q2 2SC4177-T1L7
Q3 2SC4177-T1L7
Q4 2SC4177-T1L7
Q5 2SC4177-T1L7
Q6 2SC4177-T1L7
Q7 2SC4177-T1L7
D21 LC-204MB
IC1 PCF8574AT
IC2 (1/2) SN74HC139ANS
IC2 (2/2) SN74HC139ANS
IC3 (2/2) SN74HC139ANS
IC3 (1/2) SN74HC139ANS
IC4 PCF8574AT
IC5 PCF8574AT
Q5 2SB1114-T1ZL
IC6 (1/2) μPC4062G2
Q6 2SD1614-T1XL
IC6 (2/2) μPC4062G2
IC7 TC7S00F-TE85L
IC8 TC7S00F-TE85L
IC9 TC7S32F-TE85L
IC10 TC7S32F-TE85L
IC11 TC7S04F-TE85L
IC12 AT27C512R-15JC
IC13 SN74HC193ANS
IC14 TC4S584F-TE85L
Q1 2SB1114-T1ZL
Q2 2SB1114-T1ZL
Q3 2SB1114-T1ZL
Q4 2SB1114-T1ZL
D1 MA143-TX

NOTE

NM : NO MOUNT

NOTE

REF.NO	CHANGE INFORMATION	SERIAL NO.
C5	DELETED SILKSCREEN	10100 and higher

DP-158 BOARD
DSC-62 BOARD
HDCA-50 (W.W)
B-¥HDCA50-DP158/M

MA-48 BOARD

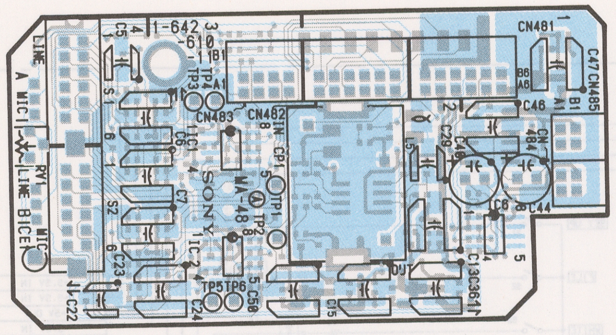
CN481
C47
CN485
CN483
CN482
MA-48
SONY
LINE
MIC
S1
S2
C44
C46
TP5
TP6

1-642-610-11 COMPONENT SIDE

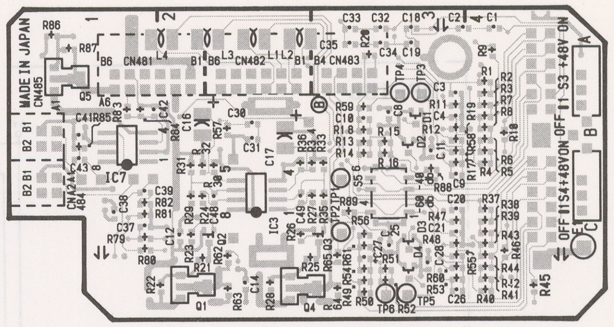
MADE IN JAPAN
CN485
CN481
CN482
CN483
IC7
IC3
Q1
Q4
TP3
TP4
TP5
TP6

1-642-610-11 SOLDERING SIDE

MA-48 BOARD

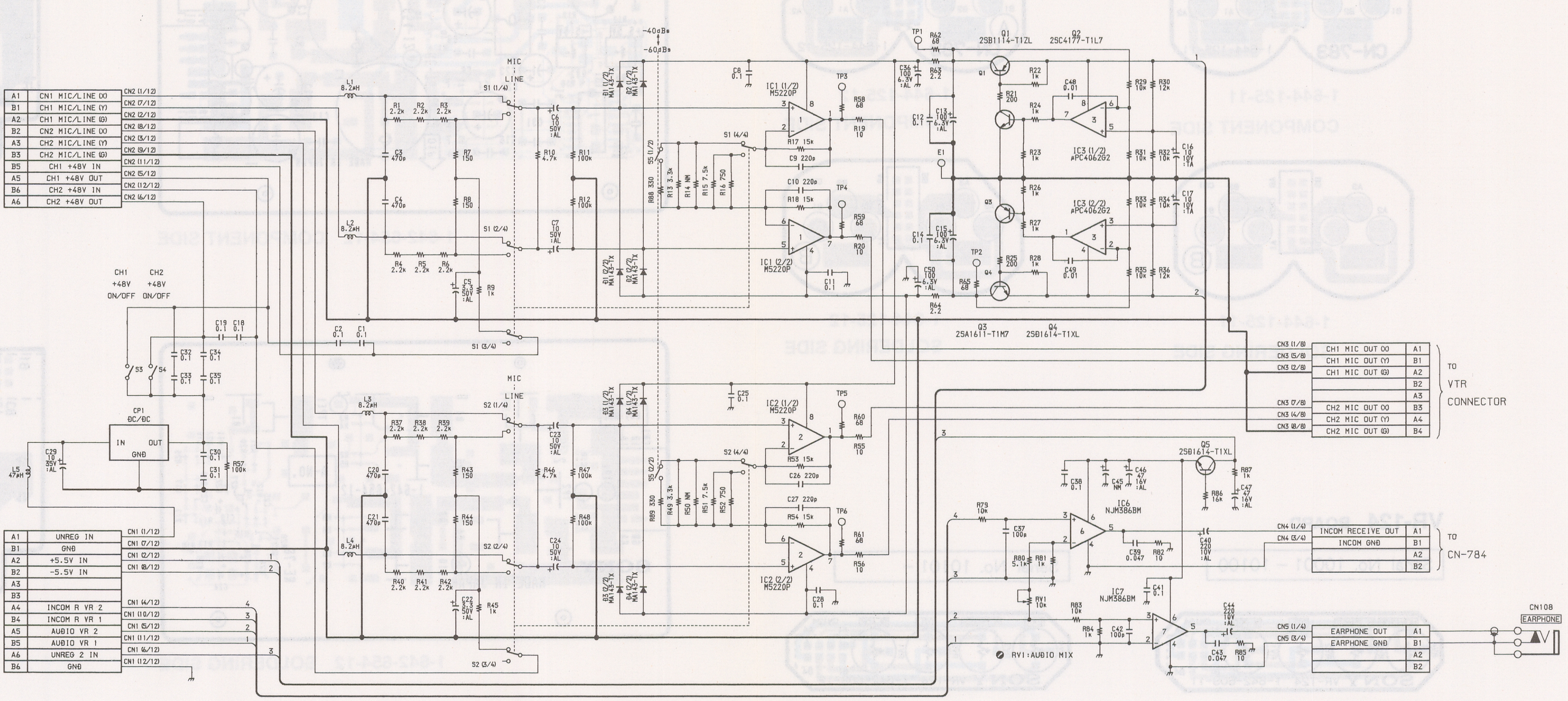
TO
CN-782
or
CN-783
A1 CN1 MIC/LINE (X) CN2 (1/12)
B1 CH1 MIC/LINE (Y) CN2 (7/12)
A2 CH1 MIC/LINE (G) CN2 (2/12)
B2 CN2 MIC/LINE (X) CN2 (8/12)
A3 CH2 MIC/LINE (Y) CN2 (3/12)
B3 CH2 MIC/LINE (G) CN2 (9/12)
B5 CH1 +48V IN CN2 (11/12)
A5 CH1 +48V OUT CN2 (5/12)
B6 CH2 +48V IN CN2 (12/12)
A6 CH2 +48V OUT CN2 (6/12)
CH1 +48V ON/OFF
CH2 +48V ON/OFF
CP1 DC/DC
IN OUT GND
L5 47μH
C29 10 35V :AL
TO
MB-366
CN19
A1 UNREG IN CN1 (1/12)
B1 GND CN1 (7/12)
A2 +5.5V IN CN1 (2/12)
B2 -5.5V IN CN1 (8/12)
A3
B3
A4 INCOM R VR 2 CN1 (4/12)
B4 INCOM R VR 1 CN1 (10/12)
A5 AUDIO VR 2 CN1 (5/12)
B5 AUDIO VR 1 CN1 (11/12)
A6 UNREG 2 IN CN1 (6/12)
B6 GND CN1 (12/12)
MIC
LINE
S1 (1/4)
S1 (2/4)
S1 (3/4)
S1 (4/4)
S2 (1/4)
S2 (2/4)
S2 (3/4)
S2 (4/4)
L1 8.2μH
L2 8.2μH
L3 8.2μH
L4 8.2μH
-40dBs
-60dBs
IC1 (1/2) M5220P
IC1 (2/2) M5220P
IC2 (1/2) M5220P
IC2 (2/2) M5220P
TP1
TP2
TP3
TP4
TP5
TP6
E1
Q1 2SB1114-T1ZL
Q2 2SC4177-T1L7
Q3 2SA1611-T1M7
Q4 2SD1614-T1XL
IC3 (1/2) μPC4062G2
IC3 (2/2) μPC4062G2
CN3 (1/8) CH1 MIC OUT (X) A1
CN3 (5/8) CH1 MIC OUT (Y) B1
CN3 (2/8) CH1 MIC OUT (G) A2
B2
A3
CN3 (7/8) CH2 MIC OUT (X) B3
CN3 (4/8) CH2 MIC OUT (Y) A4
CN3 (8/8) CH2 MIC OUT (G) B4
TO
VTR
CONNECTOR
Q5 2SD1614-T1XL
IC6 NJM386BM
IC7 NJM386BM
RV1 10k
RV1 : AUDIO MIX
CN4 (1/4) INCOM RECEIVE OUT A1
CN4 (3/4) INCOM GND B1
A2
B2
TO
CN-784
CN5 (1/4) EARPHONE OUT A1
CN5 (3/4) EARPHONE GND B1
A2
B2
CN108
EARPHONE

MA-48 BOARD
HDCA-50 (W.W)
B-¥HDCA50-MA48/M

NOTE

NM : NO MOUNT

CN-782 BOARD

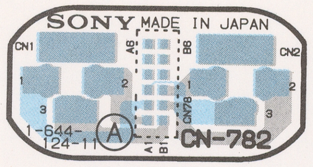
SONY
MADE IN JAPAN
CN1
CN2
1-644-124-11
Ⓐ
CN-782

1-642-124-11
COMPONENT SIDE

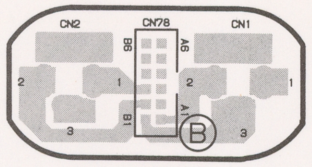
CN2
CN78
CN1
Ⓑ

1-642-124-11
SOLDERING SIDE

CN-783 BOARD

Serial No. 10001 – 10100

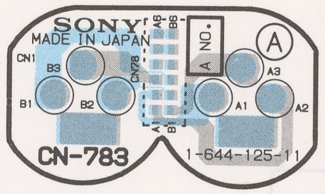
SONY
MADE IN JAPAN
CN1
B3
B2
B1
A3
A2
A1
Ⓐ
CN-783
1-644-125-11

1-644-125-11
COMPONENT SIDE

Serial No. 10101 –

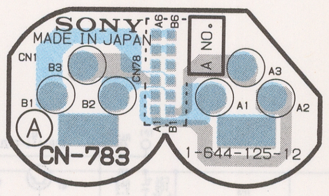
SONY
MADE IN JAPAN
CN1
B3
B2
B1
A3
A2
A1
Ⓐ
CN-783
1-644-125-12

1-644-125-12
COMPONENT SIDE

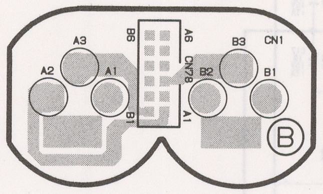
A3
A2
A1
B3
B2
B1
CN1
CN78
Ⓑ

1-644-125-11
SOLDERING SIDE

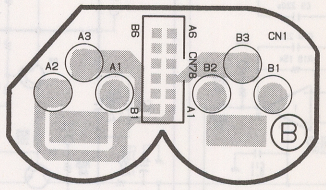
A3
A2
A1
B3
B2
B1
CN1
CN78
Ⓑ

1-644-125-12
SOLDERING SIDE

CN-784 BOARD

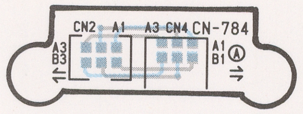
CN2
A1
A3
CN4
CN-784
B3
B1
Ⓐ

1-644-142-11
COMPONENT SIDE

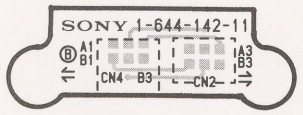
SONY 1-644-142-11
Ⓑ
A1
B1
CN4
B3
CN2
A3
B3

1-644-142-11
SOLDERING SIDE

VR-124 BOARD

Serial No. 10001 – 10100

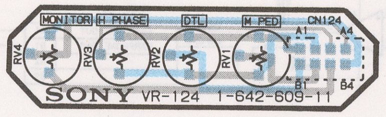
MONITOR
H PHASE
DTL
M PED
CN124
RV4
RV3
RV2
RV1
SONY VR-124 1-642-609-11

1-642-609-11
COMPONENT SIDE

Serial No. 10101 –

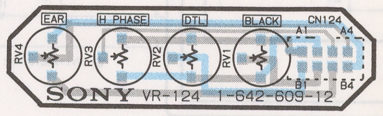
EAR
H PHASE
DTL
BLACK
CN124
RV4
RV3
RV2
RV1
SONY VR-124 1-642-609-12

1-642-609-12
COMPONENT SIDE

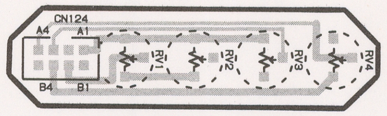
CN124
A4
A1
B4
B1
RV1
RV2
RV3
RV4

1-642-609-11
SOLDERING SIDE

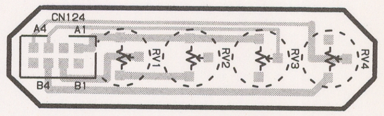
CN124
A4
A1
B4
B1
RV1
RV2
RV3
RV4

1-642-609-12
SOLDERING SIDE

RE-76 BOARD

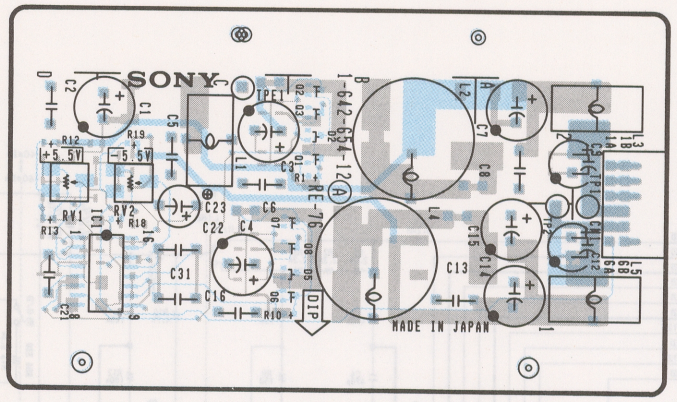
SONY
1-642-654-12
RE-76
+5.5V
-5.5V
RV1
RV2
IC1
TPE1
MADE IN JAPAN
DIP

1-642-654-12 COMPONENT SIDE

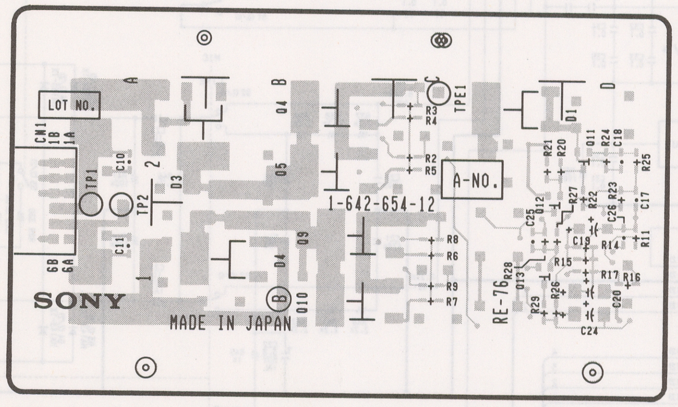
LOT NO.
CN1
TP1
TP2
A-NO.
1-642-654-12
RE-76
SONY
MADE IN JAPAN
Ⓑ

1-642-654-12 SOLDERING SIDE

SW-498 BOARD

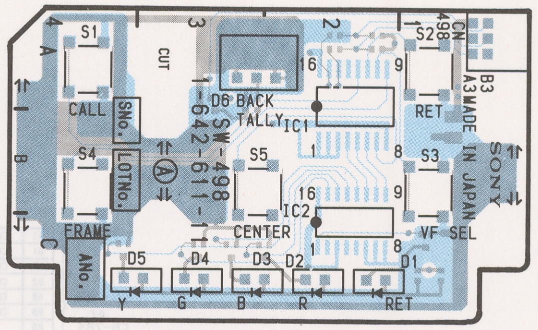
S1
S2
S3
S4
S5
CALL
RET
CUT
D6 BACK TALLY
IC1
IC2
SW-498
1-642-611-11
FRAME
CENTER
VF SEL
MADE IN JAPAN
SONY
D1
D2
D3
D4
D5
Y
G
B
R
RET
Ⓐ

1-642-611-11 COMPONENT SIDE

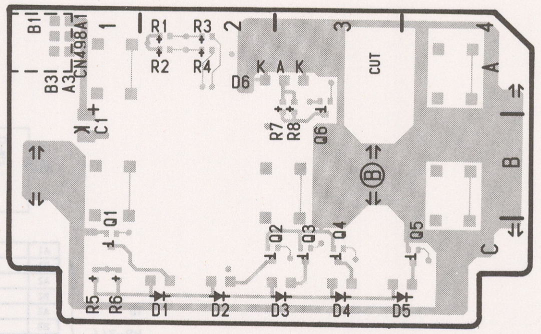
CN498
R1
R2
R3
R4
R5
R6
R7
R8
D6
Q1
Q2
Q3
Q4
Q5
Q6
CUT
D1
D2
D3
D4
D5
Ⓑ

1-642-611-11 SOLDERING SIDE

MB-366 BOARD

Serial No. 10001 – 10100

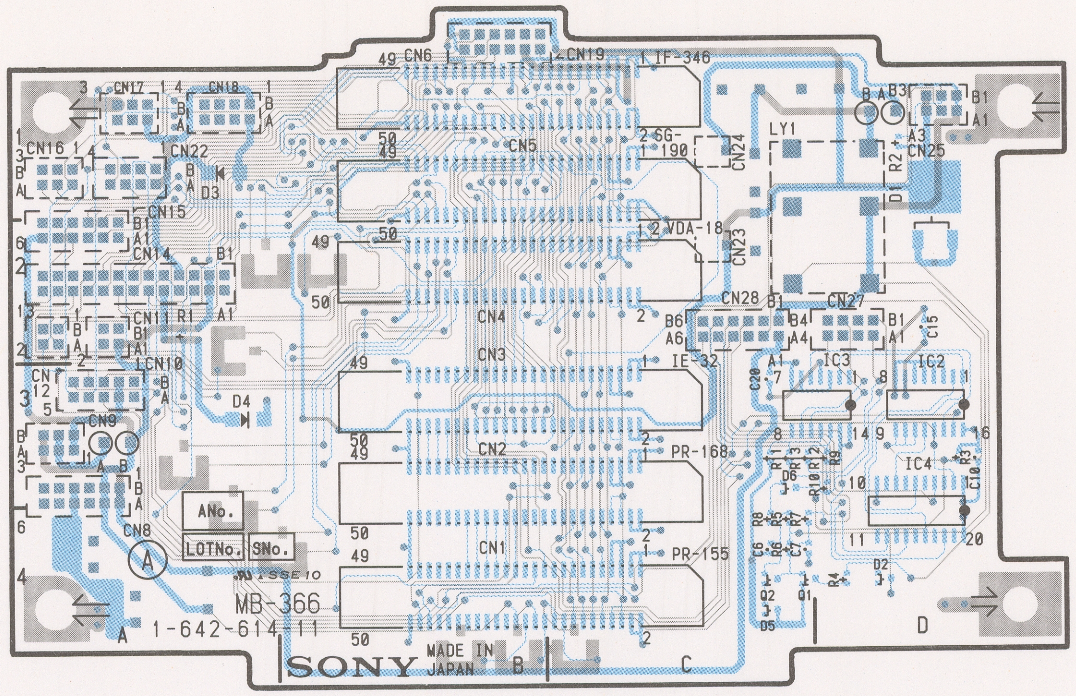
CN6
CN19
IF-346
CN17
CN18
CN16
CN22
D3
CN15
CN14
CN11
CN10
CN9
CN8
CN5
SG-190
CN24
LY1
CN25
VDA-18
CN23
CN4
CN3
CN2
CN1
CN28
CN27
IE-32
IC3
IC2
IC4
PR-168
PR-155
D4
ANo.
LOTNo.
SNo.
MB-366
1-642-614-11
SONY
MADE IN JAPAN
A
B
C
D

1-642-614-11 COMPONENT SIDE

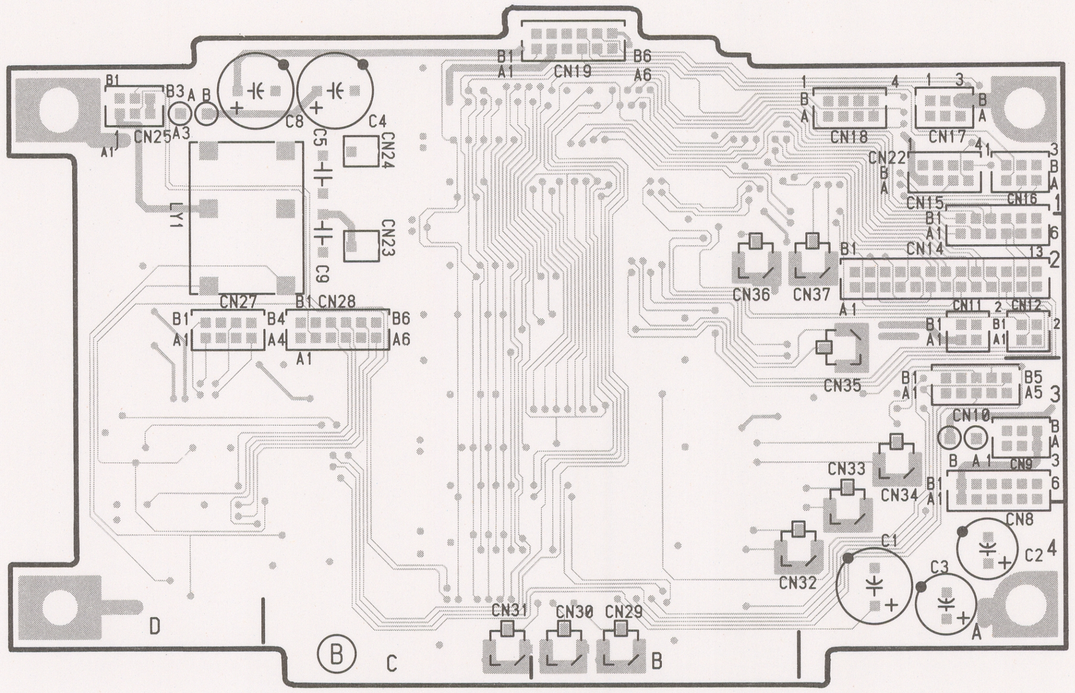
CN19
CN25
CN24
CN23
LY1
C8
C4
C5
C9
CN27
CN28
CN18
CN17
CN22
CN16
CN15
CN14
CN36
CN37
CN11
CN12
CN35
CN10
CN9
CN33
CN34
CN8
CN32
C1
C2
C3
CN31
CN30
CN29
B
C
D
A

1-642-614-11 SOLDERING SIDE

Serial No. 10101 –

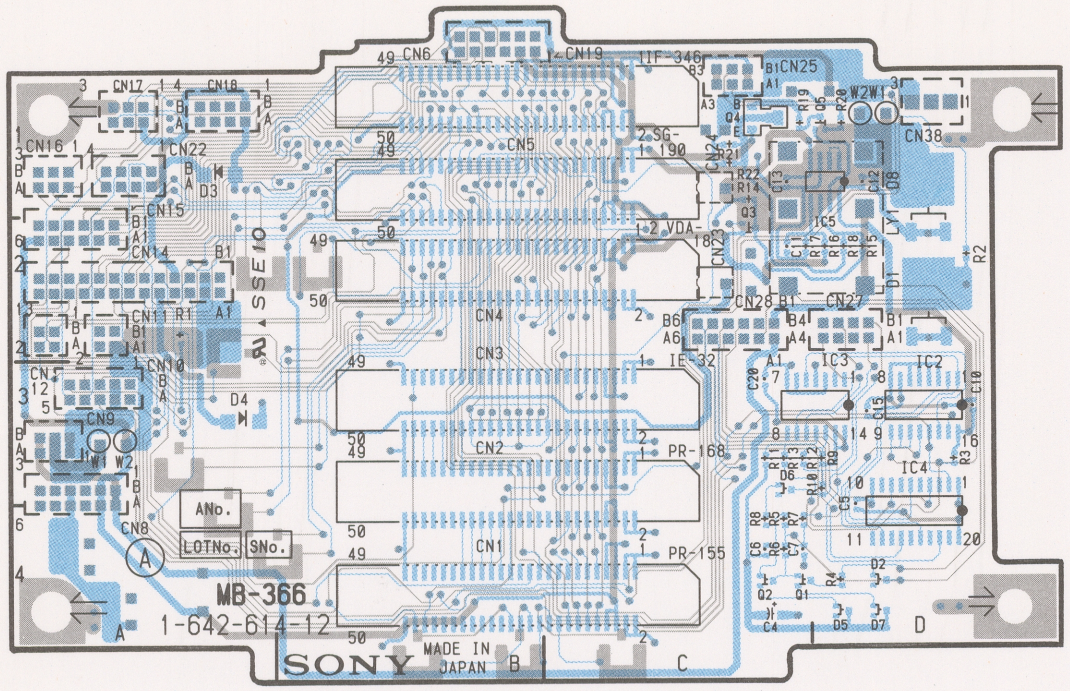
CN6
CN19
IF-346
CN25
CN17
CN18
CN16
CN22
D3
CN15
CN14
CN11
CN10
CN9
CN8
CN5
SG-190
CN24
VDA-
CN38
IC5
CN28
CN27
IE-32
IC3
IC2
IC4
CN4
CN3
CN2
CN1
PR-168
PR-155
D4
ANo.
LOTNo.
SNo.
MB-366
1-642-614-12
SONY
MADE IN JAPAN
A
B
C
D

1-642-614-12 COMPONENT SIDE

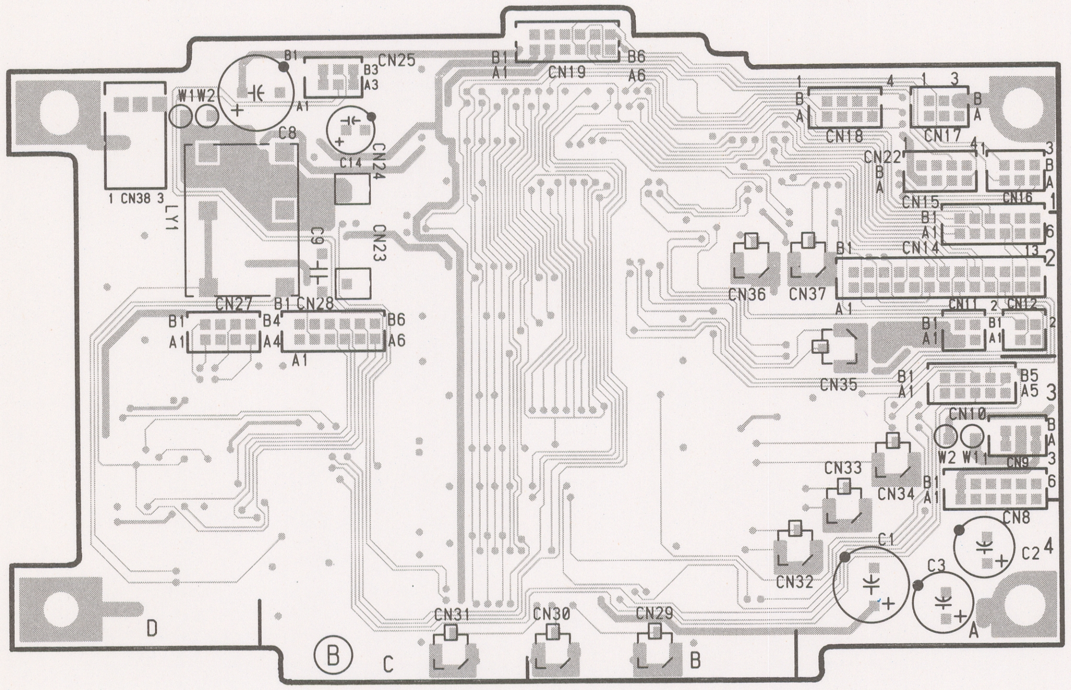
CN25
CN19
CN38
LY1
C8
C14
CN24
CN23
C9
CN27
CN28
CN18
CN17
CN22
CN16
CN15
CN14
CN36
CN37
CN11
CN12
CN35
CN10
CN9
CN33
CN34
CN8
CN32
C1
C2
C3
CN31
CN30
CN29
B
C
D
A

1-642-614-12 SOLDERING SIDE

FRAME WIRING

CN-782 BOARD
CN-783 BOARD
CN-784 BOARD
MB-366 BOARD
RE-76 BOARD
SW-498 BOARD
VR-124 BOARD

MB-366
PR-155
PR-168
IE-32
VDA-18
SG-190
IF-346
RE-76
SW-498
DP-158
MA-48
VR-124
CN-782
CN-783
CN-784
FAN
CN110 REMOTE (FEMALE)
CN101 VF (FEMALE)
CN107
CN104 VTR (MALE)
-EXTERNAL VIEW-
WIRING VIEW
SUPPLIES ACCESSORY
CN112 INCOM
CN102 INCOM
RECEIVE
TALK
FUSE 10.0A
FRAME
HDCA-50 (W.W)

SECTION D
SPARE PARTS

PARTS INFORMATION

1. **Safety Related Component Warning**

   Components identified by shading marked with ⚠ on the schematic diagrams, exploded views and electrical spare parts list are critical to safe operation. Replace these components with Sony parts whose parts numbers appear as shown in this manual or in service manual supplements published by Sony.

2. Replace parts that are supplied from Sony Parts Center can sometimes have different shape and external appearance than what are actually used in equipment. This is due to“accommodating the improved parts and/or engineering changes” or“standardization of genuine parts.”
   - This manual’s exploded view and electrical spare parts lists are indicating the parts numbers of “the standardized genuine parts at present.”
   - Regarding engineering parts and diagrams changes in our engineering department, refer to Sony service bulletins and service manual supplements.

3. The parts marked with“S” in the SP column of the exploded views and electrical spare parts list are normally required for routine service work. Orders for parts marked with “O” will be processed, but allow for additional delivery time.

4. Item with no parts number and/or no description are not stocked because they are seldom required for routine service.

5. All capacitors are in micro farads unless otherwise specified.
   All inductors are in micro henries unless otherwise specified.
   All resistors are in ohms.

EXPLODED VIEW

```
-------------
CHASSIS BLOCK
-------------
```

No.	Part No.	SP	Description
1	A-8270-417-A	o	MIC/LINE CONNECTOR ASSY, FEMALE (SUPPLIED ACCESSORY)
2	A-8271-267-A	o	MOUNTED CIRCUIT BOARD, RE-76
3	X-3166-637-1	o	PLATE (CA) ASSY, WEDGE
4	X-3166-638-1	o	ARM ASSY, GUARD
5	X-3166-669-1	o	PLATE SUB ASSY, SIDE, RIGHT,CA
6	X-3166-755-1	o	PLATE SUB ASSY, SIDE, CA LEFT
7	X-3166-756-1	o	CHASSIS SUB ASSY
8	1-507-251-99	s	JACK "EARPHONE"
9	1-561-781-21	s	CONNECTOR, BNC "MONITOR"
10	1-561-376-21	s	CONNECTOR, 4P FEMALE "DC OUT"
11	1-562-221-51	s	CONNECTOR, 12P FEMALE "REMOTE" "VF"
12	1-562-244-00	o	CONNECTOR, 26P MALE "VTR"
13	1-563-030-31	s	CONNECTOR, 3P MALE "MIC/LINE CH1/CH2"
14	1-565-908-11	s	CONNECTOR, 4P MALE "DC IN"
15	1-573-618-11	s	CONNECTOR, 3P FEMALE (SUPPLIED ACCESSORY)
16	1-644-124-11	o	PRINTED CIRCUIT BOARD, CN-782
17	1-644-142-11	o	PRINTED CIRCUIT BOARD, CN-784
18	1-949-917-21	o	HARNESS (CHU)
19	1-950-197-11	o	HARNESS (VTR)
20	1-950-217-12	o	HARNESS (INCOM-1) (SUPPLIED ACCESSORY)
21	1-950-218-11	o	HARNESS (INCOM-2) "INCOM"
22	1-950-624-12	o	HARNESS (GND)
23	2-249-309-00	s	RING (A), INCOM INSULATING (SUPPLIED ACCESSORY)
24	2-357-606-01	s	SPRING, COMPRESSION
25	3-175-581-01	o	PLATE, MOUNT
26	3-175-583-01	o	STOPPER (L), LEFT SIDE PLATE
27	3-175-587-01	o	PIN, LOCK
28	3-175-588-03	o	WEDGE (CA)
29	3-175-589-01	o	PLATE, MESH, FILTER
30	3-175-590-01	o	LABEL, SW
31	3-175-591-02	o	PLATE (CA), CN
32	3-175-594-01	o	WEDGE (CA)(SMALL)
33	3-175-600-01	s	BOLT(M4X9),HEXAGON SOCKET HEAD
34	3-175-601-01	s	SCREW,COIN,CROSS-RECESSED HEAD
35	3-175-602-01	o	RETAINER
36	3-175-606-01	o	LABEL, FILTER
37	3-175-689-01	o	CASE (MAIN), SHIELD, RE
38	3-175-690-01	o	CASE (LID), SHIELD, RE
39	3-175-761-01	o	PIN, STOPPER
40	3-175-762-01	o	LEVER, LOCK
41	3-175-763-01	o	HORSE (M4)
42	3-176-304-01	o	PLATE, INCOM (SUPPLIED ACCESSORY)
43	3-176-305-01	o	NUT(M10), INCOM(SUPPLIED ACCESSORY)
44	3-176-315-01	o	LABEL (2) (A)
45	3-176-316-01	o	LABEL (3) (A)
46	3-176-317-01	o	LABEL, DC IN
47	3-176-318-01	o	PANEL (4) (A), CONNECTOR (SUPPLIED ACCESSORY)
48	3-176-325-01	o	LABEL (1) (A)
49	3-176-332-01	o	CONNECTOR, BOX (A)
50	3-176-333-01	o	RAIL (A), PC BOARD
51	3-176-376-01	o	PANEL (1) (A), CONNECTOR
52	3-176-377-01	o	PANEL (2) (A), CONNECTOR
53	3-176-378-01	o	PANEL (3) (A), CONNECTOR
54	3-176-518-01	o	NUT (U), PLATE
55	3-176-522-01	o	SHAFT, ROTARY
56	3-176-523-01	o	WASHER (1), POLYAMIDE
57	3-176-524-01	o	WASHER (2), POLYAMIDE
58	3-176-525-01	o	WASHER, SPRING
59	3-176-526-01	o	NUT, RETAINER
60	3-176-527-01	o	BEARING, METAL
61	3-437-229-01	s	INSULATOR (B), JACK
62	3-673-018-11	s	SCREW, BLIND
63	3-678-684-00	o	HOLDER, CABLE
64	3-692-444-01	o	SPACER, BNC INSULATING (SUPPLIED ACCESSORY)
65	3-701-439-11	s	WASHER
66	7-623-959-41	s	WASHER, 10 FIBER (SUPPLIED ACCESSORY)
67	3-701-822-00	s	HOLDER, WIRE
68	3-849-405-00	s	COVER, EARPHONE JACK
69	4-882-670-00	s	SPRING, COMPRESSION
70	7-621-561-19	s	+K 2.6X6
71	7-621-770-87	s	SCREW +B 2.6X5
72	7-621-773-86	s	SCREW +B 2.6X4
73	7-621-775-08	s	SCREW +B 2.6X3
74	7-624-133-04	s	STOP RING 3, TYPE-CE
75	7-627-554-27	s	SCREW, PRECITION +P 2X6 TYPE1
76	7-627-556-37	s	SCREW,PRECISION +P2.6X4 TYPE 1
77	7-627-556-38	s	SCREW +P 2.6X4.0
78	7-627-556-58	s	SCREW +P 2.6X5
79	7-627-556-77	s	SCREW,PRECISION +P2.6X6 TYPE 1
80	7-682-545-04	s	SCREW +B 3X4
81	7-682-545-09	s	SCREW +B 3X4
82	7-682-547-04	s	SCREW +B 3X6
83	7-682-560-09	s	SCREW +B 4X6
84	7-683-403-04	s	BOLT, HEXAGON SOCKET 3X6
85	7-683-404-04	s	BOLT, HEXAGON SOCKET 3X8
86	1-541-950-11	s	FAN, DC
87	3-176-333-11	o	RAIL (A), PC BOARD
88	3-178-601-01	o	POLE, PROTECTION
89	3-178-603-01	s	SPONGE, DROP PROTECTION
90	3-178-787-01	o	CUSHION, PC BOARD

CHASSIS BLOCK

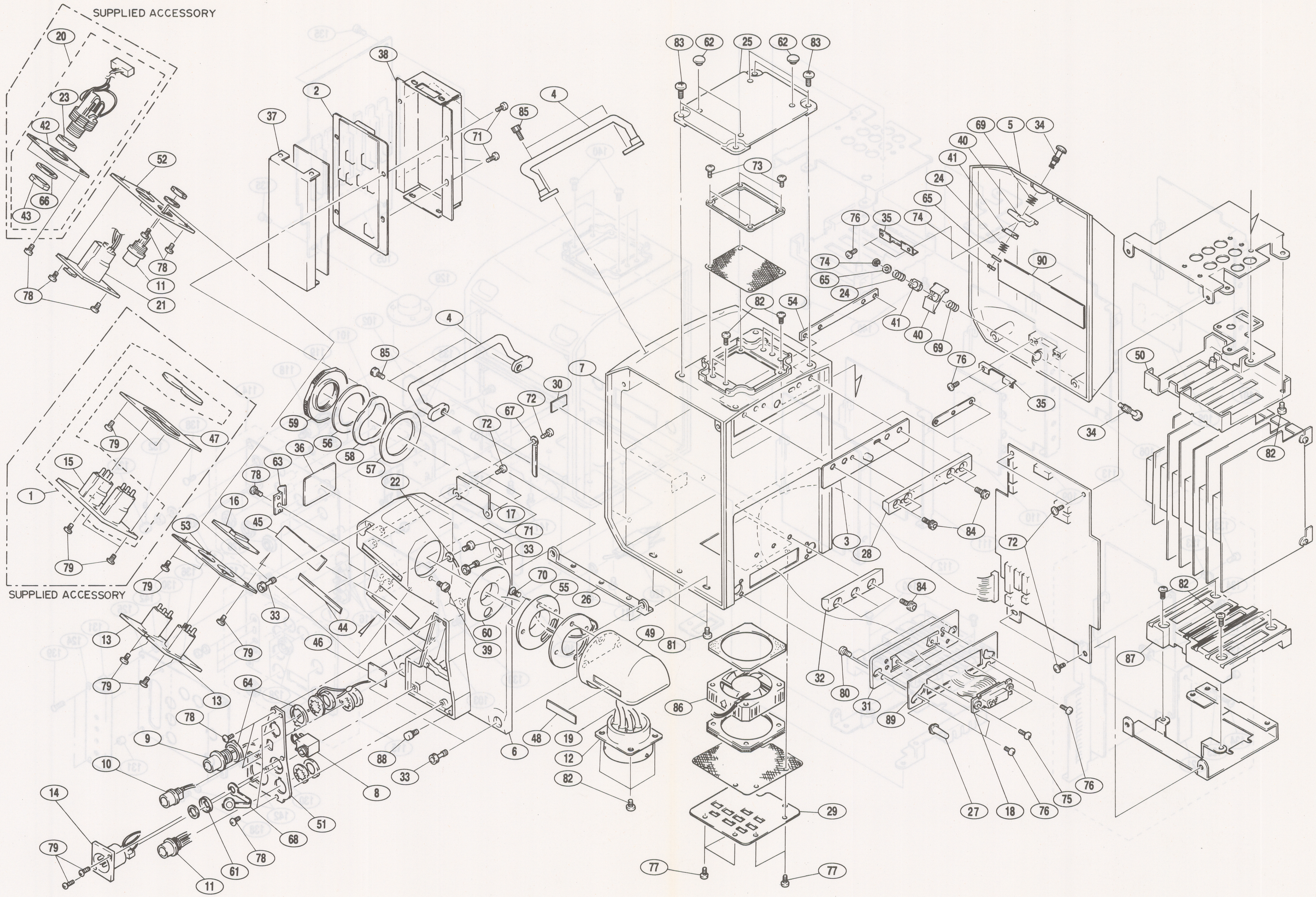
SUPPLIED ACCESSORY
20
23
42
66
43
52
78
11
21
78
37
2
38
71
85
4
83
62
25
62
83
73
69
5
34
40
41
24
65
76
35
74
74
65
24
90
82
54
41
40
69
76
35
34
50
82
4
85
7
30
72
67
72
59
56
58
57
36
63
78
22
17
71
33
16
45
53
47
79
15
1
79
79
SUPPLIED ACCESSORY
33
70
55
26
60
39
44
46
79
13
79
13
49
81
3
28
84
84
72
32
80
31
89
86
82
87
64
78
9
10
88
33
8
6
48
19
12
82
29
27
18
76
75
76
14
79
11
61
78
68
51
77
77

BOARDS AND REAR PANEL BLOCK

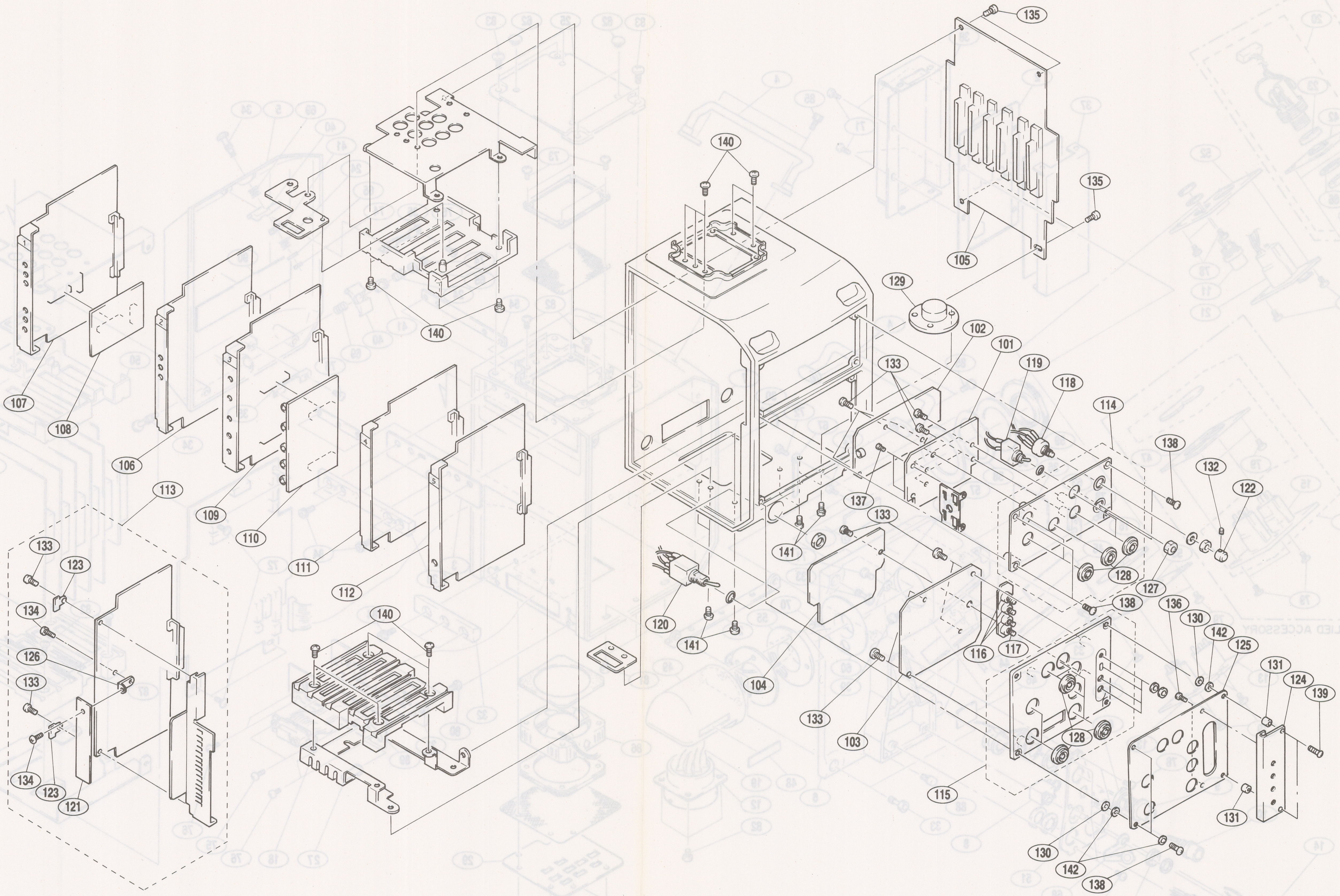
135
140
135
105
129
102
101
119
118
114
133
138
132
122
137
133
141
128
127
138
136
130
142
125
131
124
139
116
117
120
141
104
133
103
128
115
131
130
142
138
107
108
106
113
109
110
111
112
140
133
123
134
126
133
134
123
121
140

BOARD AND REAR PANEL BLOCK

No.	Part No.	SP	Description
101	A-8271-403-A	o	MOUNTED CIRCUIT BOARD, SW-498
102	A-8271-404-A	o	MOUNTED CIRCUIT BOARD, MA-48
103	A-8271-405-A	o	MOUNTED CIRCUIT BOARD, DP-158
104	A-8271-406-A	o	MOUNTED CIRCUIT BOARD, DSC-62
105	A-8271-407-A	o	MOUNTED CIRCUIT BOARD, MB-366
106	A-8271-408-A	o	MOUNTED CIRCUIT BOARD, PR-168
107	A-8271-409-A	o	MOUNTED CIRCUIT BOARD, PR-155
108	A-8271-410-A	o	MOUNTED CIRCUIT BOARD, MX-33
109	A-8271-411-A	o	MOUNTED CIRCUIT BOARD, IE-32
110	A-8271-412-A	o	MOUNTED CIRCUIT BOARD, IE-34
111	A-8271-413-A	o	MOUNTED CIRCUIT BOARD, VDA-18
112	A-8271-414-A	o	MOUNTED CIRCUIT BOARD, SG-190
113	A-8271-415-A	o	MOUNTED CIRCUIT BOARD, IF-346
114	X-3166-718-1	o	PANEL ASSY (U), REAR
115	X-3166-719-1	o	PANEL ASSY (L), REAR
116	1-223-165-00	s	RES, WIREWOUND 10K "M PED" "DTL" "H PHASE"
117	1-223-166-00	s	RES, WIREWOUND 2K "MONITOR"
118	1-237-981-11	s	RES, VAR, CARBON 20K "INCOM LEVEL"
119	1-571-070-11	s	SWITCH, TOGGLE "MIC ON/OFF"
120	1-571-367-11	s	SWTCH, TOGGLE "POWER ON/OFF"
121	1-642-621-11	o	PRINTED CIRCUIT BOARD, SW-489
122	3-166-509-01	s	KNOB
123	3-175-429-01	s	KNOB, PULL OUT
124	3-176-334-01	o	PLATE, INDICATION, VOLUME
125	3-176-335-01	s	GUARD (A), PANEL SWITCH
126	3-176-519-11	o	BRACKET, L (Serial No. 10011 and higher)
127	3-672-267-00	s	NUT, CONTROL
128	3-676-244-00	s	COVER, SWITCH
129	3-693-654-02	o	SCREW (3/8), TRIPOD
130	3-701-437-11	s	WASHER
131	4-913-528-01	o	SPACER, BUTTON
132	7-621-731-08	s	SET-SCT,HEX. 2X2.5,FLAT POINT
133	7-621-770-87	s	SCREW +B 2.6X5
134	7-621-772-08	s	SCREW +B 2X3
135	7-621-773-86	s	SCREW +B 2.6X4
136	7-627-553-37	s	SCREW,PRECISION +P 2X3
137	7-627-553-47	s	SCREW,PRECISION +P 2X4
138	7-627-556-98	s	SCREW,PRECISION +P 2.6X8 TYPE1
139	7-627-557-48	s	SCREW,PRECISION +P2.6X10 TYPE1
140	7-682-547-04	s	SCREW +B 3X6
141	7-682-547-09	s	SCREW +B 3X6
142	7-688-002-02	s	W 2.6, SMALL

ELECTRICAL PARTS

CN-782 BOARD

Ref. No. or Q'ty	Part No.	SP	Description
1pc	1-644-124-11	o	PRINTED CIRCUIT BOARD, CN-782
1pc	3-176-378-01	o	PANEL (3) (A), CONNECTOR
2pcs	7-627-556-37	s	SCREW,PRECISION +P2.6X4 TYPE 1
CN1	1-563-030-31	s	CONNECTOR, 3P (MALE)
CN2	1-563-030-31	s	CONNECTOR, 3P (MALE)
CN78	1-580-535-11	o	PIN, CONNECTOR (PC BOARD) 12P

CN-783 BOARD

Ref. No. or Q'ty	Part No.	SP	Description
1pc	A-8270-417-A	o	MOUNTED CIRCUIT BOARD, CN-783
CN1	1-573-618-11	s	CONNECTOR (ROUND TYPE)
CN78	1-580-535-11	o	PIN, CONNECTOR (PC BOARD) 12P

CN-784 BOARD

Ref. No. or Q'ty	Part No.	SP	Description
1pc	1-644-142-11	o	PRINTED CIRCUIT BOARD, CN-784
CN2	1-580-532-11	o	PIN, CONNECTOR (PC BOARD) 6P
CN4	1-580-558-11	o	PIN, CONNECTOR (PC BOARD) 6P

DP-158 BOARD

Ref. No. or Q'ty	Part No.	SP	Description
1pc	A-8271-405-A	o	MOUNTED CIRCUIT BOARD, DP-158
CN1	1-568-359-11	s	CONNECTOR, BOARD TO BOARD 20P
CN2	1-568-360-11	s	CONNECTOR, BOARD TO BOARD 22P
CN158	1-580-559-11	o	PIN, CONNECTOR (PC BOARD) 8P
D1	8-719-800-76	s	DIODE 1SS226
D2	8-719-800-76	s	DIODE 1SS226
D3	8-719-800-76	s	DIODE 1SS226
D4	8-719-800-76	s	DIODE 1SS226
D5	8-719-800-76	s	DIODE 1SS226
D6	8-719-800-76	s	DIODE 1SS226
D7	8-719-800-76	s	DIODE 1SS226
D8	8-719-800-76	s	DIODE 1SS226
D9	8-719-974-44	s	LED PG4553KY, GRN
D10	8-719-974-44	s	LED PG4553KY, GRN
D11	8-719-974-44	s	LED PG4553KY, GRN
D12	8-719-974-44	s	LED PG4553KY, GRN
D13	8-719-974-44	s	LED PG4553KY, GRN
D14	8-719-974-44	s	LED PG4553KY, GRN
D15	8-719-974-44	s	LED PG4553KY, GRN
D16	8-719-974-44	s	LED PG4553KY, GRN
D17	8-719-974-44	s	LED PG4553KY, GRN
D18	8-719-974-44	s	LED PG4553KY, GRN
D19	8-719-974-44	s	LED PG4553KY, GRN
D20	8-719-974-44	s	LED PG4553KY, GRN
D21	8-719-025-72	s	DIODE LC-204MB
Q1	8-729-117-32	s	TRANSISTOR 2SC4177
Q2	8-729-117-32	s	TRANSISTOR 2SC4177
Q3	8-729-117-32	s	TRANSISTOR 2SC4177
Q4	8-729-117-32	s	TRANSISTOR 2SC4177
Q5	8-729-117-32	s	TRANSISTOR 2SC4177
Q6	8-729-117-32	s	TRANSISTOR 2SC4177
Q7	8-729-117-32	s	TRANSISTOR 2SC4177
R1	1-218-676-11	s	METAL 220 0.50% 1/16W
R2	1-218-676-11	s	METAL 220 0.50% 1/16W
R3	1-218-668-11	s	METAL 100 0.50% 1/16W
R4	1-218-668-11	s	METAL 100 0.50% 1/16W
R5	1-218-668-11	s	METAL 100 0.50% 1/16W
R6	1-218-668-11	s	METAL 100 0.50% 1/16W
R7	1-218-668-11	s	METAL 100 0.50% 1/16W
R8	1-218-668-11	s	METAL 100 0.50% 1/16W
R9	1-218-668-11	s	METAL 100 0.50% 1/16W
R10	1-218-668-11	s	METAL 100 0.50% 1/16W
R11	1-218-668-11	s	METAL 100 0.50% 1/16W
R12	1-218-668-11	s	METAL 100 0.50% 1/16W
R13	1-218-668-11	s	METAL 100 0.50% 1/16W
R14	1-218-668-11	s	METAL 100 0.50% 1/16W
R15	1-218-668-11	s	METAL 100 0.50% 1/16W
R16	1-218-668-11	s	METAL 100 0.50% 1/16W
R17	1-218-668-11	s	METAL 100 0.50% 1/16W
R18	1-218-716-11	s	METAL 10K 0.50% 1/16W
R19	1-218-716-11	s	METAL 10K 0.50% 1/16W
R20	1-218-716-11	s	METAL 10K 0.50% 1/16W
R21	1-218-716-11	s	METAL 10K 0.50% 1/16W
R22	1-218-716-11	s	METAL 10K 0.50% 1/16W
R23	1-218-716-11	s	METAL 10K 0.50% 1/16W
R24	1-218-716-11	s	METAL 10K 0.50% 1/16W
R25	1-218-676-11	s	METAL 220 0.50% 1/16W

(DP-158 BOARD)

Ref. No. or Q'ty	Part No.	SP	Description
R26	1-218-676-11	s	METAL 220 0.50% 1/16W
R27	1-218-676-11	s	METAL 220 0.50% 1/16W
R28	1-218-676-11	s	METAL 220 0.50% 1/16W
S1	1-570-472-11	s	SWITCH, KEY BOARD
S2	1-570-472-11	s	SWITCH, KEY BOARD
S3	1-570-472-11	s	SWITCH, KEY BOARD
S4	1-570-472-11	s	SWITCH, KEY BOARD
S5	1-570-472-11	s	SWITCH, KEY BOARD
S6	1-570-472-11	s	SWITCH, KEY BOARD
S7	1-570-472-11	s	SWITCH, KEY BOARD
S8	1-570-472-11	s	SWITCH, KEY BOARD

DSC-62 BOARD

Ref. No. or Q'ty	Part No.	SP	Description
1pc	A-8271-406-A	o	MOUNTED CIRCUIT BOARD, DSC-62
C1	1-135-216-11	s	TANTALUM, CHIP 10uF 20% 10V
C2	1-135-216-11	s	TANTALUM, CHIP 10uF 20% 10V
C3	1-164-156-11	s	CERAMIC 0.1uF 25V0%
C4	1-164-156-11	s	CERAMIC 0.1uF 25V0%
C6	1-164-156-11	s	CERAMIC 0.1uF 25V0%
C7	1-135-216-11	s	TANTALUM, CHIP 10uF 20% 10V
C8	1-135-227-11	s	TANTAL 100uF 10% 6.3V
CN1	1-568-336-11	s	CONNECTOR, BOARD TO BOARD 20P
D1	8-719-800-76	s	DIODE 1SS226
IC1	8-759-990-63	s	IC PCF8574AT
IC2	8-759-926-12	s	IC SN74HC139ANS
IC3	8-759-926-12	s	IC SN74HC139ANS
IC4	8-759-990-63	s	IC PCF8574AT
IC5	8-759-990-63	s	IC PCF8574AT
IC6	8-759-142-20	s	IC UPC4062G2
IC7	8-759-038-46	s	IC SC7S00F
IC8	8-759-038-46	s	IC SC7S00F
IC9	8-759-035-93	s	IC TC7S32F
IC10	8-759-035-93	s	IC TC7S32F
IC11	8-759-031-84	s	IC SC7S04F
IC12	8-759-075-81	o	IC 27C512-DSC62-V1.0
IC13	8-759-926-37	s	IC SN74HC193ANS
IC14	8-759-245-04	s	IC TC4S584F-TE85L
Q1	8-729-805-25	s	TRANSISTOR 2SB1121-S
Q2	8-729-805-25	s	TRANSISTOR 2SB1121-S
Q3	8-729-805-25	s	TRANSISTOR 2SB1121-S
Q4	8-729-805-25	s	TRANSISTOR 2SB1121-S
Q5	8-729-805-25	s	TRANSISTOR 2SB1121-S
Q6	8-729-807-16	s	TRANSISTOR 2SD1621-R
R1	1-216-797-11	s	METAL, CHIP 10 5% 1/16W
R2	1-216-797-11	s	METAL, CHIP 10 5% 1/16W
R3	1-218-740-11	s	METAL 100K 0.50% 1/16W
R4	1-218-740-11	s	METAL 100K 0.50% 1/16W
R5	1-216-797-11	s	METAL, CHIP 10 5% 1/16W
R6	1-216-797-11	s	METAL, CHIP 10 5% 1/16W
R7	1-216-797-11	s	METAL, CHIP 10 5% 1/16W
R8	1-216-797-11	s	METAL, CHIP 10 5% 1/16W
R9	1-218-272-11	s	METAL 5.1K 0.50% 1/16W
R10	1-218-272-11	s	METAL 5.1K 0.50% 1/16W
R11	1-218-484-11	s	METAL 750 0.50% 1/16W
R12	1-218-706-11	s	METAL 3.9K 0.50% 1/16W
R13	1-218-706-11	s	METAL 3.9K 0.50% 1/16W
R14	1-218-484-11	s	METAL 750 0.50% 1/16W
R15	1-218-716-11	s	METAL 10K 0.50% 1/16W
R16	1-218-716-11	s	METAL 10K 0.50% 1/16W
R17	1-216-834-11	s	METAL, CHIP 12K 5% 1/16W
R18	1-218-716-11	s	METAL 10K 0.50% 1/16W
R19	1-218-706-11	s	METAL 3.9K 0.50% 1/16W
R20	1-218-706-11	s	METAL 3.9K 0.50% 1/16W
R21	1-218-716-11	s	METAL 10K 0.50% 1/16W
R22	1-218-716-11	s	METAL 10K 0.50% 1/16W
R23	1-218-716-11	s	METAL 10K 0.50% 1/16W
R24	1-218-716-11	s	METAL 10K 0.50% 1/16W
R26	1-218-740-11	s	METAL 100K 0.50% 1/16W

(DSC-62 BOARD)

Ref. No. or Q'ty	Part No.	SP	Description
R27	1-218-704-11	s	METAL 3.3K 0.50% 1/16W
R28	1-218-716-11	s	METAL 10K 0.50% 1/16W
R29	1-218-740-11	s	METAL 100K 0.50% 1/16W
R30	1-216-789-11	s	METAL, CHIP 2.2 5% 1/16W
R31	1-216-789-11	s	METAL, CHIP 2.2 5% 1/16W
R32	1-216-789-11	s	METAL, CHIP 2.2 5% 1/16W
R33	1-216-789-11	s	METAL, CHIP 2.2 5% 1/16W

IE-32 BOARD

Ref. No. or Q'ty	Part No.	SP	Description
1pc	A-8271-411-A	o	MOUNTED CIRCUIT BOARD, IE-32
2pcs	7-621-772-18	s	SCREW +B 2X4
2pcs	7-627-553-68	s	SCREW, PRECISION +P 2X6
C1	1-164-156-11	s	CERAMIC 0.1uF 25V0%
C2	1-162-970-11	s	CERAMIC, CHIP 0.01uF 10% 25V
C3	1-162-907-11	s	CERAMIC, CHIP 2PF 50V
C4	1-162-927-11	s	CERAMIC, CHIP 100PF 5% 50V
C5	1-164-156-11	s	CERAMIC 0.1uF 25V0%
C6	1-164-156-11	s	CERAMIC 0.1uF 25V0%
C7	1-162-905-11	s	CERAMIC 1PF 0.25PF 50V
C8	1-162-927-11	s	CERAMIC, CHIP 100PF 5% 50V
C9	1-164-156-11	s	CERAMIC 0.1uF 25V0%
C10	1-164-156-11	s	CERAMIC 0.1uF 25V0%
C11	1-164-156-11	s	CERAMIC 0.1uF 25V0%
C12	1-164-156-11	s	CERAMIC 0.1uF 25V0%
C13	1-164-156-11	s	CERAMIC 0.1uF 25V0%
C14	1-164-156-11	s	CERAMIC 0.1uF 25V0%
C15	1-164-156-11	s	CERAMIC 0.1uF 25V0%
C16	1-164-156-11	s	CERAMIC 0.1uF 25V0%
C17	1-164-156-11	s	CERAMIC 0.1uF 25V0%
C18	1-164-156-11	s	CERAMIC 0.1uF 25V0%
C19	1-164-156-11	s	CERAMIC 0.1uF 25V0%
C20	1-164-156-11	s	CERAMIC 0.1uF 25V0%
C21	1-164-156-11	s	CERAMIC 0.1uF 25V0%
C22	1-164-156-11	s	CERAMIC 0.1uF 25V0%
C23	1-164-156-11	s	CERAMIC 0.1uF 25V0%
C24	1-135-157-21	s	TANTALUM, CHIP 10uF 10% 6.3V
C25	1-164-378-11	s	CERAMIC 30PF 5% 50V
C26	1-164-156-11	s	CERAMIC 0.1uF 25V0%
C27	1-164-156-11	s	CERAMIC 0.1uF 25V0%
C28	1-164-156-11	s	CERAMIC 0.1uF 25V0%
C30	1-162-927-11	s	CERAMIC, CHIP 100PF 5% 50V
C31	1-135-216-11	s	TANTALUM, CHIP 10uF 20% 10V
C32	1-135-216-11	s	TANTALUM, CHIP 10uF 20% 10V
C33	1-164-156-11	s	CERAMIC 0.1uF 25V0%
C34	1-164-156-11	s	CERAMIC 0.1uF 25V0%
C35	1-162-927-11	s	CERAMIC, CHIP 100PF 5% 50V
C37	1-162-911-11	s	CERAMIC, CHIP 6PF 50V
C38	1-164-156-11	s	CERAMIC 0.1uF 25V0%
C39	1-164-156-11	s	CERAMIC 0.1uF 25V0%
C41	1-162-927-11	s	CERAMIC, CHIP 100PF 5% 50V
C42	1-135-216-11	s	TANTALUM, CHIP 10uF 20% 10V
C43	1-135-216-11	s	TANTALUM, CHIP 10uF 20% 10V
C44	1-164-156-11	s	CERAMIC 0.1uF 25V0%
C45	1-162-919-11	s	CERAMIC, CHIP 22PF 5% 50V
C46	1-164-156-11	s	CERAMIC 0.1uF 25V0%
C47	1-164-156-11	s	CERAMIC 0.1uF 25V0%
C49	1-162-919-11	s	CERAMIC, CHIP 22PF 5% 50V
C201	1-164-156-11	s	CERAMIC 0.1uF 25V0%
C202	1-162-970-11	s	CERAMIC, CHIP 0.01uF 10% 25V
C203	1-162-907-11	s	CERAMIC, CHIP 2PF 50V
C204	1-162-927-11	s	CERAMIC, CHIP 100PF 5% 50V
C205	1-164-156-11	s	CERAMIC 0.1uF 25V0%
C206	1-164-156-11	s	CERAMIC 0.1uF 25V0%
C207	1-162-905-11	s	CERAMIC 1PF 0.25PF 50V
C208	1-162-927-11	s	CERAMIC, CHIP 100PF 5% 50V
C209	1-164-156-11	s	CERAMIC 0.1uF 25V0%
C210	1-164-156-11	s	CERAMIC 0.1uF 25V0%

(IE-32 BOARD)

Ref. No. or Q'ty	Part No.	SP	Description
C211	1-164-156-11	s	CERAMIC 0.1uF 25V0%
C212	1-164-156-11	s	CERAMIC 0.1uF 25V0%
C213	1-164-156-11	s	CERAMIC 0.1uF 25V0%
C214	1-164-156-11	s	CERAMIC 0.1uF 25V0%
C215	1-164-156-11	s	CERAMIC 0.1uF 25V0%
C216	1-164-156-11	s	CERAMIC 0.1uF 25V0%
C217	1-164-156-11	s	CERAMIC 0.1uF 25V0%
C218	1-164-156-11	s	CERAMIC 0.1uF 25V0%
C219	1-164-156-11	s	CERAMIC 0.1uF 25V0%
C220	1-164-156-11	s	CERAMIC 0.1uF 25V0%
C221	1-164-156-11	s	CERAMIC 0.1uF 25V0%
C222	1-164-156-11	s	CERAMIC 0.1uF 25V0%
C223	1-164-156-11	s	CERAMIC 0.1uF 25V0%
C224	1-135-157-21	s	TANTALUM, CHIP 10uF 10% 6.3V
C225	1-164-378-11	s	CERAMIC 30PF 5% 50V
C226	1-164-156-11	s	CERAMIC 0.1uF 25V0%
C227	1-164-156-11	s	CERAMIC 0.1uF 25V0%
C228	1-164-156-11	s	CERAMIC 0.1uF 25V0%
C230	1-162-927-11	s	CERAMIC, CHIP 100PF 5% 50V
C231	1-135-216-11	s	TANTALUM, CHIP 10uF 20% 10V
C232	1-135-216-11	s	TANTALUM, CHIP 10uF 20% 10V
C233	1-164-156-11	s	CERAMIC 0.1uF 25V0%
C234	1-164-156-11	s	CERAMIC 0.1uF 25V0%
C235	1-162-927-11	s	CERAMIC, CHIP 100PF 5% 50V
C237	1-162-911-11	s	CERAMIC, CHIP 6PF 50V
C238	1-164-156-11	s	CERAMIC 0.1uF 25V0%
C239	1-164-156-11	s	CERAMIC 0.1uF 25V0%
C241	1-162-927-11	s	CERAMIC, CHIP 100PF 5% 50V
C242	1-135-216-11	s	TANTALUM, CHIP 10uF 20% 10V
C243	1-135-216-11	s	TANTALUM, CHIP 10uF 20% 10V
C244	1-164-156-11	s	CERAMIC 0.1uF 25V0%
C245	1-162-919-11	s	CERAMIC, CHIP 22PF 5% 50V
C246	1-162-919-11	s	CERAMIC, CHIP 22PF 5% 50V
C401	1-162-970-11	s	CERAMIC, CHIP 0.01uF 10% 25V
C402	1-164-156-11	s	CERAMIC 0.1uF 25V0%
C403	1-162-907-11	s	CERAMIC, CHIP 2PF 50V
C404	1-162-927-11	s	CERAMIC, CHIP 100PF 5% 50V
C405	1-164-156-11	s	CERAMIC 0.1uF 25V0%
C406	1-164-156-11	s	CERAMIC 0.1uF 25V0%
C407	1-162-905-11	s	CERAMIC 1PF 0.25PF 50V
C408	1-162-927-11	s	CERAMIC, CHIP 100PF 5% 50V
C409	1-164-156-11	s	CERAMIC 0.1uF 25V0%
C410	1-164-156-11	s	CERAMIC 0.1uF 25V0%
C411	1-164-156-11	s	CERAMIC 0.1uF 25V0%
C412	1-164-156-11	s	CERAMIC 0.1uF 25V0%
C413	1-164-156-11	s	CERAMIC 0.1uF 25V0%
C414	1-164-156-11	s	CERAMIC 0.1uF 25V0%
C415	1-164-156-11	s	CERAMIC 0.1uF 25V0%
C416	1-164-156-11	s	CERAMIC 0.1uF 25V0%
C417	1-164-156-11	s	CERAMIC 0.1uF 25V0%
C418	1-164-156-11	s	CERAMIC 0.1uF 25V0%
C419	1-164-156-11	s	CERAMIC 0.1uF 25V0%
C420	1-164-156-11	s	CERAMIC 0.1uF 25V0%
C421	1-164-156-11	s	CERAMIC 0.1uF 25V0%
C422	1-164-156-11	s	CERAMIC 0.1uF 25V0%
C423	1-164-156-11	s	CERAMIC 0.1uF 25V0%
C424	1-135-157-21	s	TANTALUM, CHIP 10uF 10% 6.3V
C425	1-164-378-11	s	CERAMIC 30PF 5% 50V
C426	1-164-156-11	s	CERAMIC 0.1uF 25V0%

(IE-32 BOARD)

Ref. No. or Q'ty	Part No.	SP	Description
C427	1-164-156-11	s	CERAMIC 0.1uF 25V0%
C428	1-164-156-11	s	CERAMIC 0.1uF 25V0%
C430	1-162-927-11	s	CERAMIC, CHIP 100PF 5% 50V
C431	1-135-216-11	s	TANTALUM, CHIP 10uF 20% 10V
C432	1-135-216-11	s	TANTALUM, CHIP 10uF 20% 10V
C433	1-164-156-11	s	CERAMIC 0.1uF 25V0%
C434	1-164-156-11	s	CERAMIC 0.1uF 25V0%
C435	1-162-927-11	s	CERAMIC, CHIP 100PF 5% 50V
C437	1-162-911-11	s	CERAMIC, CHIP 6PF 50V
C438	1-164-156-11	s	CERAMIC 0.1uF 25V0%
C439	1-164-156-11	s	CERAMIC 0.1uF 25V0%
C441	1-162-927-11	s	CERAMIC, CHIP 100PF 5% 50V
C442	1-135-216-11	s	TANTALUM, CHIP 10uF 20% 10V
C443	1-135-216-11	s	TANTALUM, CHIP 10uF 20% 10V
C444	1-164-156-11	s	CERAMIC 0.1uF 25V0%
C445	1-162-919-11	s	CERAMIC, CHIP 22PF 5% 50V
C446	1-164-156-11	s	CERAMIC 0.1uF 25V0%
C447	1-164-156-11	s	CERAMIC 0.1uF 25V0%
C448	1-164-156-11	s	CERAMIC 0.1uF 25V0%
C449	1-164-156-11	s	CERAMIC 0.1uF 25V0%
C450	1-164-156-11	s	CERAMIC 0.1uF 25V0%
C451	1-164-156-11	s	CERAMIC 0.1uF 25V0%
C452	1-164-156-11	s	CERAMIC 0.1uF 25V0%
C453	1-164-156-11	s	CERAMIC 0.1uF 25V0%
C454	1-135-157-21	s	TANTALUM, CHIP 10uF 10% 6.3V
C455	1-164-378-11	s	CERAMIC 30PF 5% 50V
C456	1-164-156-11	s	CERAMIC 0.1uF 25V0%
C457	1-164-156-11	s	CERAMIC 0.1uF 25V0%
C458	1-164-156-11	s	CERAMIC 0.1uF 25V0%
C460	1-162-927-11	s	CERAMIC, CHIP 100PF 5% 50V
C461	1-164-156-11	s	CERAMIC 0.1uF 25V0%
C462	1-164-156-11	s	CERAMIC 0.1uF 25V0%
C463	1-162-927-11	s	CERAMIC, CHIP 100PF 5% 50V
C465	1-162-919-11	s	CERAMIC, CHIP 22PF 5% 50V
C466	1-162-919-11	s	CERAMIC, CHIP 22PF 5% 50V
C601	1-164-156-11	s	CERAMIC 0.1uF 25V0%
C602	1-164-156-11	s	CERAMIC 0.1uF 25V0%
C603	1-162-970-11	s	CERAMIC, CHIP 0.01uF 10% 25V
C604	1-162-970-11	s	CERAMIC, CHIP 0.01uF 10% 25V
C605	1-162-970-11	s	CERAMIC, CHIP 0.01uF 10% 25V
C606	1-162-970-11	s	CERAMIC, CHIP 0.01uF 10% 25V
C607	1-164-156-11	s	CERAMIC 0.1uF 25V0%
C608	1-164-156-11	s	CERAMIC 0.1uF 25V0%
C609	1-164-156-11	s	CERAMIC 0.1uF 25V0%
C610	1-164-156-11	s	CERAMIC 0.1uF 25V0%
C611	1-164-156-11	s	CERAMIC 0.1uF 25V0%
C612	1-135-157-21	s	TANTALUM, CHIP 10uF 10% 6.3V
C613	1-135-161-21	s	TANTALUM, CHIP 22uF 10% 10V
C614	1-164-156-11	s	CERAMIC 0.1uF 25V0%
C615	1-164-156-11	s	CERAMIC 0.1uF 25V0%
C616	1-135-161-21	s	TANTALUM, CHIP 22uF 10% 10V
C617	1-164-156-11	s	CERAMIC 0.1uF 25V0%
C801	1-164-156-11	s	CERAMIC 0.1uF 25V0%
C802	1-162-927-11	s	CERAMIC, CHIP 100PF 5% 50V
C803	1-162-927-11	s	CERAMIC, CHIP 100PF 5% 50V
C804	1-126-392-11	s	ELECT, CHIP 100uF 20% 6.3V
C805	1-126-392-11	s	ELECT, CHIP 100uF 20% 6.3V
C806	1-164-156-11	s	CERAMIC 0.1uF 25V0%
C807	1-164-156-11	s	CERAMIC 0.1uF 25V0%

(IE-32 BOARD)

Ref. No. or Q'ty	Part No.	SP	Description
C808	1-162-970-11	s	CERAMIC, CHIP 0.01uF 10% 25V
C809	1-162-970-11	s	CERAMIC, CHIP 0.01uF 10% 25V
C810	1-162-970-11	s	CERAMIC, CHIP 0.01uF 10% 25V
C812	1-164-156-11	s	CERAMIC 0.1uF 25V0%
C813	1-164-156-11	s	CERAMIC 0.1uF 25V0%
C814	1-162-915-11	s	CERAMIC, CHIP 10PF 5PF 50V
C815	1-164-156-11	s	CERAMIC 0.1uF 25V0%
C816	1-164-156-11	s	CERAMIC 0.1uF 25V0%
C817	1-135-177-21	s	TANTALUM, CHIP 1uF 10% 25V
C818	1-135-177-21	s	TANTALUM, CHIP 1uF 10% 25V
CN1	1-691-847-11	s	CONNECTOR, BOARD TO BOARD 50P
CN2	1-565-430-11	s	SOCKET, SIL 10P
CN3	1-565-430-11	s	SOCKET, SIL 10P
DL1	1-415-910-11	s	DELAY LINE, PULSE
DL201	1-415-910-11	s	DELAY LINE, PULSE
DL401	1-415-910-11	s	DELAY LINE, PULSE
DL801	1-415-879-11	s	DELAY LINE, PULSE
DL802	1-415-879-11	s	DELAY LINE, PULSE
FL1	1-239-297-11	s	FILTER, LOW PASS
FL2	1-239-297-11	s	FILTER, LOW PASS
FL201	1-239-297-11	s	FILTER, LOW PASS
FL202	1-239-297-11	s	FILTER, LOW PASS
FL401	1-239-297-11	s	FILTER, LOW PASS
FL402	1-239-297-11	s	FILTER, LOW PASS
FL403	1-239-297-11	s	FILTER, LOW PASS
IC1	8-759-054-61	s	IC CLC505AJE
IC2	8-759-054-61	s	IC CLC505AJE
IC3	8-752-342-70	s	IC CXD1179Q
IC4	8-752-342-70	s	IC CXD1179Q
IC5	8-752-338-45	s	IC CXK1202Q
IC6	8-752-338-45	s	IC CXK1202Q
IC7	8-752-339-46	s	IC CXD1177Q
IC8	8-759-054-61	s	IC CLC505AJE
IC9	8-759-054-61	s	IC CLC505AJE
IC10	8-759-054-61	s	IC CLC505AJE
IC11	8-759-142-19	s	IC UPC4064G
IC201	8-759-054-61	s	IC CLC505AJE
IC202	8-759-054-61	s	IC CLC505AJE
IC203	8-752-342-70	s	IC CXD1179Q
IC204	8-752-342-70	s	IC CXD1179Q
IC205	8-752-338-45	s	IC CXK1202Q
IC206	8-752-338-45	s	IC CXK1202Q
IC207	8-752-339-46	s	IC CXD1177Q
IC208	8-759-054-61	s	IC CLC505AJE
IC209	8-759-054-61	s	IC CLC505AJE
IC210	8-759-054-61	s	IC CLC505AJE
IC401	8-759-054-61	s	IC CLC505AJE
IC402	8-759-054-61	s	IC CLC505AJE
IC403	8-752-342-70	s	IC CXD1179Q
IC404	8-752-342-70	s	IC CXD1179Q
IC405	8-752-338-45	s	IC CXK1202Q
IC406	8-752-338-45	s	IC CXK1202Q
IC407	8-752-339-46	s	IC CXD1177Q
IC408	8-759-054-61	s	IC CLC505AJE
IC409	8-759-054-61	s	IC CLC505AJE
IC410	8-759-054-61	s	IC CLC505AJE
IC411	8-752-338-45	s	IC CXK1202Q
IC412	8-752-338-45	s	IC CXK1202Q

(IE-32 BOARD)

Ref. No. or Q'ty	Part No.	SP	Description
IC413	8-752-339-46	s	IC CXD1177Q
IC414	8-759-054-61	s	IC CLC505AJE
IC415	8-759-054-61	s	IC CLC505AJE
IC601	8-759-242-64	s	IC TC4W53F
IC602	8-759-234-77	s	IC TC4S66F
IC603	8-759-300-71	s	IC MC14053BF
IC604	8-759-142-20	s	IC UPC4062G2
IC605	8-759-054-63	s	IC TLC339CNS
IC606	8-759-635-27	s	IC M62352GP
IC607	8-759-990-61	s	IC PCF8574T
IC801	8-759-066-68	s	IC REF-03GS
IC802	8-759-142-20	s	IC UPC4062G2
IC803	8-759-141-61	s	IC UPA103G
IC804	8-759-062-76	s	IC MC74ACT08M
L1	1-412-390-21	s	INDUCTOR, CHIP 0uH
L2	1-412-390-21	s	INDUCTOR, CHIP 0uH
L3	1-412-390-21	s	INDUCTOR, CHIP 0uH
L4	1-412-390-21	s	INDUCTOR, CHIP 0uH
L5	1-412-390-21	s	INDUCTOR, CHIP 0uH
L201	1-412-390-21	s	INDUCTOR, CHIP 0uH
L202	1-412-390-21	s	INDUCTOR, CHIP 0uH
L203	1-412-390-21	s	INDUCTOR, CHIP 0uH
L204	1-412-390-21	s	INDUCTOR, CHIP 0uH
L205	1-412-390-21	s	INDUCTOR, CHIP 0uH
L401	1-412-390-21	s	INDUCTOR, CHIP 0uH
L402	1-412-390-21	s	INDUCTOR, CHIP 0uH
L403	1-412-390-21	s	INDUCTOR, CHIP 0uH
L404	1-412-390-21	s	INDUCTOR, CHIP 0uH
L405	1-412-390-21	s	INDUCTOR, CHIP 0uH
L406	1-412-390-21	s	INDUCTOR, CHIP 0uH
L407	1-412-390-21	s	INDUCTOR, CHIP 0uH
L408	1-412-390-21	s	INDUCTOR, CHIP 0uH
L801	1-412-390-21	s	INDUCTOR, CHIP 0uH
Q1	8-729-143-14	s	TRANSISTOR 2SC4176-B35
Q2	8-729-143-14	s	TRANSISTOR 2SC4176-B35
Q3	8-769-401-67	s	TRANSISTOR 3SK163-1
Q4	8-769-401-67	s	TRANSISTOR 3SK163-1
Q5	8-729-425-41	s	TRANSISTOR 2SK1374
Q201	8-729-143-14	s	TRANSISTOR 2SC4176-B35
Q202	8-729-143-14	s	TRANSISTOR 2SC4176-B35
Q203	8-769-401-67	s	TRANSISTOR 3SK163-1
Q204	8-769-401-67	s	TRANSISTOR 3SK163-1
Q205	8-729-425-41	s	TRANSISTOR 2SK1374
Q401	8-729-143-14	s	TRANSISTOR 2SC4176-B35
Q402	8-729-143-14	s	TRANSISTOR 2SC4176-B35
Q403	8-769-401-67	s	TRANSISTOR 3SK163-1
Q404	8-769-401-67	s	TRANSISTOR 3SK163-1
Q405	8-729-425-41	s	TRANSISTOR 2SK1374
Q406	8-729-143-14	s	TRANSISTOR 2SC4176-B35
Q407	8-729-143-14	s	TRANSISTOR 2SC4176-B35
Q408	8-769-401-67	s	TRANSISTOR 3SK163-1
Q409	8-769-401-67	s	TRANSISTOR 3SK163-1
Q801	8-729-117-32	s	TRANSISTOR 2SC4177
Q802	8-729-117-16	s	TRANSISTOR 2SA1611-M6
Q803	8-729-805-25	s	TRANSISTOR 2SB1121-S
Q804	8-729-807-16	s	TRANSISTOR 2SD1621-R
Q805	8-729-117-16	s	TRANSISTOR 2SA1611-M6
Q806	8-729-117-32	s	TRANSISTOR 2SC4177

(IE-32 BOARD)

Ref. No. or Q'ty	Part No.	SP	Description
Q807	8-729-117-32	s	TRANSISTOR 2SC4177
R1	1-218-716-11	s	METAL 10K 0.50% 1/16W
R2	1-216-821-11	s	METAL, CHIP 1K 5% 1/16W
R3	1-218-668-11	s	METAL 100 0.50% 1/16W
R4	1-216-821-11	s	METAL, CHIP 1K 5% 1/16W
R5	1-218-745-11	s	METAL 160K 0.50% 1/16W
R6	1-218-680-11	s	METAL 330 0.50% 1/16W
R7	1-218-680-11	s	METAL 330 0.50% 1/16W
R8	1-216-801-11	s	METAL 22 0.50% 1/16W
R9	1-218-313-11	s	METAL, CHIP 560 1% 1/16W
R11	1-216-821-11	s	METAL, CHIP 1K 5% 1/16W
R12	1-218-745-11	s	METAL 160K 0.50% 1/16W
R13	1-218-664-11	s	METAL 68 0.50% 1/16W
R14	1-218-285-11	s	METAL, CHIP 75 5% 1/16W
R15	1-218-285-11	s	METAL, CHIP 75 5% 1/16W
R16	1-216-864-11	s	METAL, CHIP 0-OHM
R18	1-216-864-11	s	METAL, CHIP 0-OHM
R21	1-216-864-11	s	METAL, CHIP 0-OHM
R22	1-218-704-11	s	METAL 3.3K 0.50% 1/16W
R23	1-218-285-11	s	METAL, CHIP 75 5% 1/16W
R24	1-218-698-11	s	METAL 1.8K 0.50% 1/16W
R25	1-216-864-11	s	METAL, CHIP 0-OHM
R26	1-216-822-11	s	METAL, CHIP 1.2K 5% 1/16W
R27	1-218-669-11	s	METAL 110 0.50% 1/16W
R28	1-218-648-11	s	METAL 15 0.50% 1/16W
R29	1-218-285-11	s	METAL, CHIP 75 5% 1/16W
R30	1-218-669-11	s	METAL 110 0.50% 1/16W
R31	1-218-648-11	s	METAL 15 0.50% 1/16W
R32	1-218-700-11	s	METAL 2.2K 0.50% 1/16W
R33	1-218-700-11	s	METAL 2.2K 0.50% 1/16W
R34	1-218-676-11	s	METAL 220 0.50% 1/16W
R35	1-218-676-11	s	METAL 220 0.50% 1/16W
R36	1-216-801-11	s	METAL 22 0.50% 1/16W
R37	1-216-801-11	s	METAL 22 0.50% 1/16W
R38	1-218-732-11	s	METAL 47K 0.50% 1/16W
R39	1-218-714-11	s	METAL 8.2K 0.50% 1/16W
R40	1-216-816-11	s	METAL, CHIP 390 5% 1/16W
R41	1-218-716-11	s	METAL 10K 0.50% 1/16W
R42	1-218-698-11	s	METAL 1.8K 0.50% 1/16W
R43	1-216-821-11	s	METAL, CHIP 1K 5% 1/16W
R44	1-218-745-11	s	METAL 160K 0.50% 1/16W
R45	1-218-680-11	s	METAL 330 0.50% 1/16W
R46	1-218-680-11	s	METAL 330 0.50% 1/16W
R47	1-218-288-11	s	METAL, CHIP 300 5% 1/16W
R48	1-218-664-11	s	METAL 68 0.50% 1/16W
R49	1-218-745-11	s	METAL 160K 0.50% 1/16W
R50	1-216-821-11	s	METAL, CHIP 1K 5% 1/16W
R51	1-218-668-11	s	METAL 100 0.50% 1/16W
R52	1-216-821-11	s	METAL, CHIP 1K 5% 1/16W
R53	1-218-669-11	s	METAL 110 0.50% 1/16W
R54	1-218-700-11	s	METAL 2.2K 0.50% 1/16W
R55	1-216-821-11	s	METAL, CHIP 1K 5% 1/16W
R56	1-218-745-11	s	METAL 160K 0.50% 1/16W
R57	1-216-821-11	s	METAL, CHIP 1K 5% 1/16W
R58	1-218-664-11	s	METAL 68 0.50% 1/16W
R59	1-218-668-11	s	METAL 100 0.50% 1/16W
R60	1-218-285-11	s	METAL, CHIP 75 5% 1/16W
R61	1-218-716-11	s	METAL 10K 0.50% 1/16W

(IE-32 BOARD)

Ref. No. or Q'ty	Part No.	SP	Description
R62	1-216-821-11	s	METAL, CHIP 1K 5% 1/16W
R63	1-218-664-11	s	METAL 68 0.50% 1/16W
R201	1-218-716-11	s	METAL 10K 0.50% 1/16W
R202	1-216-821-11	s	METAL, CHIP 1K 5% 1/16W
R203	1-218-668-11	s	METAL 100 0.50% 1/16W
R204	1-216-821-11	s	METAL, CHIP 1K 5% 1/16W
R205	1-218-745-11	s	METAL 160K 0.50% 1/16W
R206	1-218-680-11	s	METAL 330 0.50% 1/16W
R207	1-218-680-11	s	METAL 330 0.50% 1/16W
R208	1-216-801-11	s	METAL 22 0.50% 1/16W
R209	1-218-313-11	s	METAL, CHIP 560 1% 1/16W
R211	1-216-821-11	s	METAL, CHIP 1K 5% 1/16W
R212	1-218-745-11	s	METAL 160K 0.50% 1/16W
R213	1-218-664-11	s	METAL 68 0.50% 1/16W
R214	1-218-285-11	s	METAL, CHIP 75 5% 1/16W
R215	1-218-285-11	s	METAL, CHIP 75 5% 1/16W
R216	1-216-864-11	s	METAL, CHIP 0-OHM
R218	1-216-864-11	s	METAL, CHIP 0-OHM
R221	1-216-864-11	s	METAL, CHIP 0-OHM
R222	1-218-704-11	s	METAL 3.3K 0.50% 1/16W
R223	1-218-285-11	s	METAL, CHIP 75 5% 1/16W
R224	1-218-698-11	s	METAL 1.8K 0.50% 1/16W
R225	1-216-864-11	s	METAL, CHIP 0-OHM
R226	1-216-822-11	s	METAL, CHIP 1.2K 5% 1/16W
R227	1-218-669-11	s	METAL 110 0.50% 1/16W
R228	1-218-648-11	s	METAL 15 0.50% 1/16W
R229	1-218-285-11	s	METAL, CHIP 75 5% 1/16W
R230	1-218-669-11	s	METAL 110 0.50% 1/16W
R231	1-218-648-11	s	METAL 15 0.50% 1/16W
R232	1-218-700-11	s	METAL 2.2K 0.50% 1/16W
R233	1-218-700-11	s	METAL 2.2K 0.50% 1/16W
R234	1-218-676-11	s	METAL 220 0.50% 1/16W
R235	1-218-676-11	s	METAL 220 0.50% 1/16W
R236	1-216-801-11	s	METAL 22 0.50% 1/16W
R237	1-216-801-11	s	METAL 22 0.50% 1/16W
R238	1-218-732-11	s	METAL 47K 0.50% 1/16W
R239	1-218-714-11	s	METAL 8.2K 0.50% 1/16W
R240	1-216-816-11	s	METAL, CHIP 390 5% 1/16W
R241	1-218-716-11	s	METAL 10K 0.50% 1/16W
R242	1-218-698-11	s	METAL 1.8K 0.50% 1/16W
R243	1-216-821-11	s	METAL, CHIP 1K 5% 1/16W
R244	1-218-745-11	s	METAL 160K 0.50% 1/16W
R245	1-218-680-11	s	METAL 330 0.50% 1/16W
R246	1-218-680-11	s	METAL 330 0.50% 1/16W
R247	1-218-288-11	s	METAL, CHIP 300 5% 1/16W
R248	1-218-664-11	s	METAL 68 0.50% 1/16W
R249	1-218-745-11	s	METAL 160K 0.50% 1/16W
R250	1-216-821-11	s	METAL, CHIP 1K 5% 1/16W
R251	1-218-668-11	s	METAL 100 0.50% 1/16W
R252	1-216-821-11	s	METAL, CHIP 1K 5% 1/16W
R253	1-218-669-11	s	METAL 110 0.50% 1/16W
R254	1-218-700-11	s	METAL 2.2K 0.50% 1/16W
R255	1-216-821-11	s	METAL, CHIP 1K 5% 1/16W
R256	1-218-745-11	s	METAL 160K 0.50% 1/16W
R257	1-216-821-11	s	METAL, CHIP 1K 5% 1/16W
R258	1-218-664-11	s	METAL 68 0.50% 1/16W
R259	1-218-668-11	s	METAL 100 0.50% 1/16W
R260	1-218-285-11	s	METAL, CHIP 75 5% 1/16W
R261	1-218-716-11	s	METAL 10K 0.50% 1/16W

(IE-32 BOARD)

Ref. No. or Q'ty	Part No.	SP	Description
R262	1-216-821-11	s	METAL, CHIP 1K 5% 1/16W
R263	1-218-664-11	s	METAL 68 0.50% 1/16W
R401	1-218-716-11	s	METAL 10K 0.50% 1/16W
R402	1-216-821-11	s	METAL, CHIP 1K 5% 1/16W
R403	1-218-668-11	s	METAL 100 0.50% 1/16W
R404	1-216-821-11	s	METAL, CHIP 1K 5% 1/16W
R405	1-218-745-11	s	METAL 160K 0.50% 1/16W
R406	1-218-680-11	s	METAL 330 0.50% 1/16W
R407	1-218-680-11	s	METAL 330 0.50% 1/16W
R408	1-216-801-11	s	METAL 22 0.50% 1/16W
R409	1-218-313-11	s	METAL, CHIP 560 1% 1/16W
R411	1-216-821-11	s	METAL, CHIP 1K 5% 1/16W
R412	1-218-745-11	s	METAL 160K 0.50% 1/16W
R413	1-218-664-11	s	METAL 68 0.50% 1/16W
R414	1-218-285-11	s	METAL, CHIP 75 5% 1/16W
R415	1-218-285-11	s	METAL, CHIP 75 5% 1/16W
R416	1-216-864-11	s	METAL, CHIP 0-OHM
R418	1-216-864-11	s	METAL, CHIP 0-OHM
R421	1-216-864-11	s	METAL, CHIP 0-OHM
R422	1-218-704-11	s	METAL 3.3K 0.50% 1/16W
R423	1-218-285-11	s	METAL, CHIP 75 5% 1/16W
R424	1-218-698-11	s	METAL 1.8K 0.50% 1/16W
R425	1-216-864-11	s	METAL, CHIP 0-OHM
R426	1-216-822-11	s	METAL, CHIP 1.2K 5% 1/16W
R427	1-218-669-11	s	METAL 110 0.50% 1/16W
R428	1-218-648-11	s	METAL 15 0.50% 1/16W
R429	1-218-285-11	s	METAL, CHIP 75 5% 1/16W
R430	1-218-669-11	s	METAL 110 0.50% 1/16W
R431	1-218-648-11	s	METAL 15 0.50% 1/16W
R432	1-218-700-11	s	METAL 2.2K 0.50% 1/16W
R433	1-218-700-11	s	METAL 2.2K 0.50% 1/16W
R434	1-218-676-11	s	METAL 220 0.50% 1/16W
R435	1-218-676-11	s	METAL 220 0.50% 1/16W
R436	1-216-801-11	s	METAL 22 0.50% 1/16W
R437	1-216-801-11	s	METAL 22 0.50% 1/16W
R438	1-218-732-11	s	METAL 47K 0.50% 1/16W
R439	1-218-714-11	s	METAL 8.2K 0.50% 1/16W
R440	1-216-816-11	s	METAL, CHIP 390 5% 1/16W
R441	1-218-716-11	s	METAL 10K 0.50% 1/16W
R442	1-218-698-11	s	METAL 1.8K 0.50% 1/16W
R443	1-216-821-11	s	METAL, CHIP 1K 5% 1/16W
R444	1-218-745-11	s	METAL 160K 0.50% 1/16W
R445	1-218-680-11	s	METAL 330 0.50% 1/16W
R446	1-218-680-11	s	METAL 330 0.50% 1/16W
R447	1-218-288-11	s	METAL, CHIP 300 5% 1/16W
R448	1-218-664-11	s	METAL 68 0.50% 1/16W
R449	1-218-745-11	s	METAL 160K 0.50% 1/16W
R450	1-216-821-11	s	METAL, CHIP 1K 5% 1/16W
R451	1-218-668-11	s	METAL 100 0.50% 1/16W
R452	1-216-821-11	s	METAL, CHIP 1K 5% 1/16W
R453	1-218-669-11	s	METAL 110 0.50% 1/16W
R454	1-218-700-11	s	METAL 2.2K 0.50% 1/16W
R455	1-216-821-11	s	METAL, CHIP 1K 5% 1/16W
R456	1-218-745-11	s	METAL 160K 0.50% 1/16W
R457	1-216-821-11	s	METAL, CHIP 1K 5% 1/16W
R458	1-218-664-11	s	METAL 68 0.50% 1/16W
R459	1-218-668-11	s	METAL 100 0.50% 1/16W
R460	1-218-285-11	s	METAL, CHIP 75 5% 1/16W
R461	1-218-716-11	s	METAL 10K 0.50% 1/16W

(IE-32 BOARD)

Ref. No. or Q'ty	Part No.	SP	Description
R462	1-216-821-11	s	METAL, CHIP 1K 5% 1/16W
R464	1-216-864-11	s	METAL, CHIP 0-OHM
R465	1-216-864-11	s	METAL, CHIP 0-OHM
R467	1-216-864-11	s	METAL, CHIP 0-OHM
R469	1-218-704-11	s	METAL 3.3K 0.50% 1/16W
R470	1-218-285-11	s	METAL, CHIP 75 5% 1/16W
R471	1-218-698-11	s	METAL 1.8K 0.50% 1/16W
R472	1-216-864-11	s	METAL, CHIP 0-OHM
R473	1-216-822-11	s	METAL, CHIP 1.2K 5% 1/16W
R474	1-218-669-11	s	METAL 110 0.50% 1/16W
R475	1-218-648-11	s	METAL 15 0.50% 1/16W
R476	1-218-285-11	s	METAL, CHIP 75 5% 1/16W
R477	1-218-669-11	s	METAL 110 0.50% 1/16W
R478	1-218-648-11	s	METAL 15 0.50% 1/16W
R479	1-218-700-11	s	METAL 2.2K 0.50% 1/16W
R480	1-218-700-11	s	METAL 2.2K 0.50% 1/16W
R481	1-218-676-11	s	METAL 220 0.50% 1/16W
R482	1-218-676-11	s	METAL 220 0.50% 1/16W
R483	1-216-801-11	s	METAL 22 0.50% 1/16W
R484	1-216-801-11	s	METAL 22 0.50% 1/16W
R485	1-218-732-11	s	METAL 47K 0.50% 1/16W
R486	1-218-714-11	s	METAL 8.2K 0.50% 1/16W
R487	1-216-816-11	s	METAL, CHIP 390 5% 1/16W
R488	1-218-698-11	s	METAL 1.8K 0.50% 1/16W
R489	1-216-821-11	s	METAL, CHIP 1K 5% 1/16W
R490	1-218-745-11	s	METAL 160K 0.50% 1/16W
R491	1-218-680-11	s	METAL 330 0.50% 1/16W
R492	1-218-680-11	s	METAL 330 0.50% 1/16W
R493	1-218-288-11	s	METAL, CHIP 300 5% 1/16W
R494	1-218-664-11	s	METAL 68 0.50% 1/16W
R495	1-218-745-11	s	METAL 160K 0.50% 1/16W
R496	1-216-821-11	s	METAL, CHIP 1K 5% 1/16W
R497	1-218-716-11	s	METAL 10K 0.50% 1/16W
R500	1-218-664-11	s	METAL 68 0.50% 1/16W
R601	1-218-716-11	s	METAL 10K 0.50% 1/16W
R602	1-218-716-11	s	METAL 10K 0.50% 1/16W
R603	1-218-883-11	s	METAL 33K 0.50% 1/16W
R604	1-218-716-11	s	METAL 10K 0.50% 1/16W
R605	1-218-883-11	s	METAL 33K 0.50% 1/16W
R606	1-218-345-11	s	METAL 9.1K 0.50% 1/16W
R607	1-218-701-11	s	METAL 2.4K 0.50% 1/16W
R608	1-218-716-11	s	METAL 10K 0.50% 1/16W
R609	1-218-484-11	s	METAL 750 0.50% 1/16W
R610	1-218-883-11	s	METAL 33K 0.50% 1/16W
R611	1-218-664-11	s	METAL 68 0.50% 1/16W
R612	1-216-797-11	s	METAL, CHIP 10 5% 1/16W
R613	1-216-797-11	s	METAL, CHIP 10 5% 1/16W
R614	1-216-797-11	s	METAL, CHIP 10 5% 1/16W
R615	1-218-883-11	s	METAL 33K 0.50% 1/16W
R616	1-216-797-11	s	METAL, CHIP 10 5% 1/16W
R617	1-216-797-11	s	METAL, CHIP 10 5% 1/16W
R618	1-218-716-11	s	METAL 10K 0.50% 1/16W
R619	1-216-804-11	s	METAL 39K 0.50% 1/16W
R620	1-218-883-11	s	METAL 33K 0.50% 1/16W
R621	1-218-883-11	s	METAL 33K 0.50% 1/16W
R622	1-218-883-11	s	METAL 33K 0.50% 1/16W
R801	1-218-664-11	s	METAL 68 0.50% 1/16W
R802	1-218-716-11	s	METAL 10K 0.50% 1/16W
R803	1-218-716-11	s	METAL 10K 0.50% 1/16W

(IE-32 BOARD)

Ref. No. or Q'ty	Part No.	SP	Description
R804	1-218-716-11	s	METAL 10K 0.50% 1/16W
R805	1-218-716-11	s	METAL 10K 0.50% 1/16W
R806	1-216-821-11	s	METAL, CHIP 1K 5% 1/16W
R807	1-216-821-11	s	METAL, CHIP 1K 5% 1/16W
R810	1-218-675-11	s	METAL 200 0.50% 1/16W
R811	1-218-675-11	s	METAL 200 0.50% 1/16W
R812	1-218-664-11	s	METAL 68 0.50% 1/16W
R814	1-218-664-11	s	METAL 68 0.50% 1/16W
R815	1-216-864-11	s	METAL, CHIP 0-OHM
R816	1-216-864-11	s	METAL, CHIP 0-OHM
R817	1-218-664-11	s	METAL 68 0.50% 1/16W
R818	1-218-668-11	s	METAL 100 0.50% 1/16W
R821	1-218-716-11	s	METAL 10K 0.50% 1/16W
R822	1-218-883-11	s	METAL 33K 0.50% 1/16W
R823	1-218-724-11	s	METAL 22K 0.50% 1/16W
R824	1-216-864-11	s	METAL, CHIP 0-OHM
R825	1-218-716-11	s	METAL 10K 0.50% 1/16W
R826	1-220-373-11	s	METAL 620 0.50% 1/16W
R827	1-218-708-11	s	METAL 4.7K 0.50% 1/16W
R828	1-218-676-11	s	METAL 220 0.50% 1/16W
R829	1-218-668-11	s	METAL 100 0.50% 1/16W
R830	1-220-373-11	s	METAL 620 0.50% 1/16W
R831	1-216-864-11	s	METAL, CHIP 0-OHM
R832	1-218-668-11	s	METAL 100 0.50% 1/16W
R833	1-216-864-11	s	METAL, CHIP 0-OHM
R834	1-218-676-11	s	METAL 220 0.50% 1/16W
R835	1-218-664-11	s	METAL 68 0.50% 1/16W
R836	1-216-817-11	s	METAL, CHIP 470 5% 1/16W
R837	1-218-675-11	s	METAL 200 0.50% 1/16W
R838	1-216-817-11	s	METAL, CHIP 470 5% 1/16W
R839	1-218-668-11	s	METAL 100 0.50% 1/16W
R840	1-218-668-11	s	METAL 100 0.50% 1/16W
R841	1-218-675-11	s	METAL 200 0.50% 1/16W
R842	1-218-675-11	s	METAL 200 0.50% 1/16W
RV1	1-237-033-11	s	RES, ADJ, METAL 1K
RV201	1-237-033-11	s	RES, ADJ, METAL 1K
RV401	1-237-033-11	s	RES, ADJ, METAL 1K

IE-34 BOARD

Ref. No. or Q'ty	Part No.	SP	Description
1pc	A-8271-412-A	o	MOUNTED CIRCUIT BOARD, IE-34
C1	1-126-392-11	s	ELECT, CHIP 100uF 20% 6.3V
C2	1-126-392-11	s	ELECT, CHIP 100uF 20% 6.3V
C3	1-164-156-11	s	CERAMIC 0.1uF 25V0%
C4	1-164-156-11	s	CERAMIC 0.1uF 25V0%
C5	1-164-156-11	s	CERAMIC 0.1uF 25V0%
C6	1-164-156-11	s	CERAMIC 0.1uF 25V0%
C7	1-162-916-11	s	CERAMIC, CHIP 12PF 5% 50V
C8	1-135-161-21	s	TANTALUM, CHIP 22uF 10% 10V
C9	1-162-927-11	s	CERAMIC, CHIP 100PF 5% 50V
C10	1-135-161-21	s	TANTALUM, CHIP 22uF 10% 10V
C11	1-135-076-21	s	TANTALUM, CHIP 1uF 10% 35V
C12	1-164-156-11	s	CERAMIC 0.1uF 25V0%
C13	1-164-156-11	s	CERAMIC 0.1uF 25V0%
C14	1-162-927-11	s	CERAMIC, CHIP 100PF 5% 50V
C15	1-135-076-21	s	TANTALUM, CHIP 1uF 10% 35V
C16	1-164-156-11	s	CERAMIC 0.1uF 25V0%
C17	1-164-156-11	s	CERAMIC 0.1uF 25V0%
C18	1-164-156-11	s	CERAMIC 0.1uF 25V0%
C19	1-135-161-21	s	TANTALUM, CHIP 22uF 10% 10V
C20	1-164-156-11	s	CERAMIC 0.1uF 25V0%
C21	1-164-156-11	s	CERAMIC 0.1uF 25V0%
C22	1-135-161-21	s	TANTALUM, CHIP 22uF 10% 10V
C23	1-162-927-11	s	CERAMIC, CHIP 100PF 5% 50V
C25	1-164-156-11	s	CERAMIC 0.1uF 25V0%
C26	1-164-156-11	s	CERAMIC 0.1uF 25V0%
C27	1-162-927-11	s	CERAMIC, CHIP 100PF 5% 50V
C29	1-164-156-11	s	CERAMIC 0.1uF 25V0%
C30	1-164-156-11	s	CERAMIC 0.1uF 25V0%
C31	1-164-156-11	s	CERAMIC 0.1uF 25V0%
C32	1-162-927-11	s	CERAMIC, CHIP 100PF 5% 50V
C33	1-162-905-11	s	CERAMIC 1PF 0.25PF 50V
C34	1-135-076-21	s	TANTALUM, CHIP 1uF 10% 35V
C35	1-135-076-21	s	TANTALUM, CHIP 1uF 10% 35V
C36	1-164-156-11	s	CERAMIC 0.1uF 25V0%
C37	1-164-156-11	s	CERAMIC 0.1uF 25V0%
C38	1-164-156-11	s	CERAMIC 0.1uF 25V0%
C39	1-164-156-11	s	CERAMIC 0.1uF 25V0%
C40	1-164-156-11	s	CERAMIC 0.1uF 25V0%
C41	1-164-156-11	s	CERAMIC 0.1uF 25V0%
C42	1-135-216-11	s	TANTALUM, CHIP 10uF 20% 10V
C43	1-135-076-21	s	TANTALUM, CHIP 1uF 10% 35V
C44	1-135-076-21	s	TANTALUM, CHIP 1uF 10% 35V
C45	1-135-076-21	s	TANTALUM, CHIP 1uF 10% 35V
C46	1-135-076-21	s	TANTALUM, CHIP 1uF 10% 35V
C47	1-164-156-11	s	CERAMIC 0.1uF 25V0%
C48	1-135-216-11	s	TANTALUM, CHIP 10uF 20% 10V
C49	1-164-156-11	s	CERAMIC 0.1uF 25V0%
C50	1-164-156-11	s	CERAMIC 0.1uF 25V0%
C51	1-164-156-11	s	CERAMIC 0.1uF 25V0%
C52	1-162-905-11	s	CERAMIC 1PF 0.25PF 50V
C54	1-162-927-11	s	CERAMIC, CHIP 100PF 5% 50V
C58	1-164-156-11	s	CERAMIC 0.1uF 25V0%
C59	1-164-156-11	s	CERAMIC 0.1uF 25V0%
C60	1-162-927-11	s	CERAMIC, CHIP 100PF 5% 50V
C61	1-162-911-11	s	CERAMIC, CHIP 6PF 50V
CN2	1-566-482-11	o	PIN, SOCKET 10P
CN3	1-566-482-11	o	PIN, SOCKET 10P

(IE-34 BOARD)

Ref. No. or Q'ty	Part No.	SP	Description
D1	8-719-404-35	s	DIODE MA141WK
D2	8-719-820-05	s	DIODE 1SS181
D3	8-719-404-35	s	DIODE MA141WK
DL1	1-415-912-11	s	DELAY LINE, PULSE 25nS
DL2	1-415-910-11	s	DELAY LINE, PULSE 50nS
DL3	1-415-872-11	s	DELAY LINE, PULSE
FL1	1-239-331-11	s	FILTER, LOW PASS (V DETAIL)
IC1	8-752-052-82	s	IC CXA1432M
IC2	8-759-054-61	s	IC CLC505AJE
IC3	8-759-054-61	s	IC CLC505AJE
IC4	8-759-142-20	s	IC UPC4062G2
IC5	8-759-054-61	s	IC CLC505AJE
IC6	8-759-054-61	s	IC CLC505AJE
IC7	8-759-054-61	s	IC CLC505AJE
IC8	8-759-142-20	s	IC UPC4062G2
IC9	8-759-981-51	s	IC RC1496M
IC10	8-759-142-20	s	IC UPC4062G2
IC11	8-759-054-61	s	IC CLC505AJE
IC12	8-759-054-61	s	IC CLC505AJE
L1	1-408-781-00	s	CHIP 22uH
L2	1-408-781-00	s	CHIP 22uH
Q1	8-729-143-14	s	TRANSISTOR 2SC4176-B35
Q2	8-729-143-14	s	TRANSISTOR 2SC4176-B35
Q3	8-729-143-14	s	TRANSISTOR 2SC4176-B35
Q4	8-729-143-07	s	TRANSISTOR 2SA1610-Y33
Q5	8-729-143-14	s	TRANSISTOR 2SC4176-B35
Q6	8-729-143-14	s	TRANSISTOR 2SC4176-B35
Q7	8-729-143-14	s	TRANSISTOR 2SC4176-B35
Q8	8-729-143-07	s	TRANSISTOR 2SA1610-Y33
Q9	8-729-143-07	s	TRANSISTOR 2SA1610-Y33
Q10	8-729-143-07	s	TRANSISTOR 2SA1610-Y33
Q11	8-729-143-07	s	TRANSISTOR 2SA1610-Y33
Q12	8-729-143-14	s	TRANSISTOR 2SC4176-B35
Q13	8-729-143-14	s	TRANSISTOR 2SC4176-B35
Q14	8-729-143-14	s	TRANSISTOR 2SC4176-B35
Q15	8-729-907-00	s	TRANSISTOR DTC114EU
Q16	8-729-920-99	s	TRANSISTOR DTA114EU
R1	1-218-740-11	s	METAL 100K 0.50% 1/16W
R3	1-216-821-11	s	METAL, CHIP 1K 5% 1/16W
R5	1-216-821-11	s	METAL, CHIP 1K 5% 1/16W
R8	1-216-821-11	s	METAL, CHIP 1K 5% 1/16W
R9	1-218-271-11	s	METAL 2K 0.50% 1/16W
R10	1-216-821-11	s	METAL, CHIP 1K 5% 1/16W
R11	1-216-821-11	s	METAL, CHIP 1K 5% 1/16W
R12	1-216-823-11	s	METAL, CHIP 1.5K 5% 1/16W
R13	1-218-745-11	s	METAL 160K 0.50% 1/16W
R14	1-216-821-11	s	METAL, CHIP 1K 5% 1/16W
R15	1-216-821-11	s	METAL, CHIP 1K 5% 1/16W
R16	1-218-680-11	s	METAL 330 0.50% 1/16W
R17	1-216-836-11	s	METAL, CHIP 18K 5% 1/16W
R18	1-218-272-11	s	METAL 5.1K 0.50% 1/16W
R19	1-218-668-11	s	METAL 100 0.50% 1/16W
R20	1-216-821-11	s	METAL, CHIP 1K 5% 1/16W
R21	1-218-745-11	s	METAL 160K 0.50% 1/16W
R22	1-216-822-11	s	METAL, CHIP 1.2K 5% 1/16W

(IE-34 BOARD)

Ref. No. or Q'ty	Part No.	SP	Description
R23	1-218-664-11	s	METAL 68 0.50% 1/16W
R24	1-218-720-11	s	METAL 15K 0.50% 1/16W
R25	1-218-676-11	s	METAL 220 0.50% 1/16W
R26	1-218-720-11	s	METAL 15K 0.50% 1/16W
R27	1-218-716-11	s	METAL 10K 0.50% 1/16W
R28	1-218-716-11	s	METAL 10K 0.50% 1/16W
R29	1-218-733-11	s	METAL 51K 0.50% 1/16W
R30	1-218-733-11	s	METAL 51K 0.50% 1/16W
R31	1-216-821-11	s	METAL, CHIP 1K 5% 1/16W
R32	1-218-745-11	s	METAL 160K 0.50% 1/16W
R33	1-218-664-11	s	METAL 68 0.50% 1/16W
R34	1-216-821-11	s	METAL, CHIP 1K 5% 1/16W
R35	1-218-668-11	s	METAL 100 0.50% 1/16W
R36	1-218-651-11	s	METAL 20 0.50% 1/16W
R37	1-218-668-11	s	METAL 100 0.50% 1/16W
R38	1-218-688-11	s	METAL 680 0.50% 1/16W
R39	1-218-668-11	s	METAL 100 0.50% 1/16W
R40	1-218-668-11	s	METAL 100 0.50% 1/16W
R41	1-218-708-11	s	METAL 4.7K 0.50% 1/16W
R42	1-218-668-11	s	METAL 100 0.50% 1/16W
R43	1-218-700-11	s	METAL 2.2K 0.50% 1/16W
R44	1-218-669-11	s	METAL 110 0.50% 1/16W
R45	1-218-680-11	s	METAL 330 0.50% 1/16W
R46	1-218-289-11	s	METAL, CHIP 510 5% 1/16W
R47	1-218-484-11	s	METAL 750 0.50% 1/16W
R48	1-218-745-11	s	METAL 160K 0.50% 1/16W
R49	1-216-821-11	s	METAL, CHIP 1K 5% 1/16W
R50	1-218-708-11	s	METAL 4.7K 0.50% 1/16W
R51	1-216-817-11	s	METAL, CHIP 470 5% 1/16W
R52	1-218-745-11	s	METAL 160K 0.50% 1/16W
R53	1-216-821-11	s	METAL, CHIP 1K 5% 1/16W
R54	1-218-664-11	s	METAL 68 0.50% 1/16W
R55	1-218-708-11	s	METAL 4.7K 0.50% 1/16W
R56	1-218-668-11	s	METAL 100 0.50% 1/16W
R57	1-218-716-11	s	METAL 10K 0.50% 1/16W
R58	1-218-668-11	s	METAL 100 0.50% 1/16W
R59	1-218-700-11	s	METAL 2.2K 0.50% 1/16W
R60	1-218-668-11	s	METAL 100 0.50% 1/16W
R61	1-218-708-11	s	METAL 4.7K 0.50% 1/16W
R62	1-218-675-11	s	METAL 200 0.50% 1/16W
R63	1-218-700-11	s	METAL 2.2K 0.50% 1/16W
R64	1-218-675-11	s	METAL 200 0.50% 1/16W
R65	1-216-834-11	s	METAL, CHIP 12K 5% 1/16W
R66	1-216-834-11	s	METAL, CHIP 12K 5% 1/16W
R67	1-216-834-11	s	METAL, CHIP 12K 5% 1/16W
R68	1-216-834-11	s	METAL, CHIP 12K 5% 1/16W
R69	1-218-716-11	s	METAL 10K 0.50% 1/16W
R70	1-218-716-11	s	METAL 10K 0.50% 1/16W
R71	1-218-716-11	s	METAL 10K 0.50% 1/16W
R72	1-218-716-11	s	METAL 10K 0.50% 1/16W
R73	1-218-700-11	s	METAL 2.2K 0.50% 1/16W
R74	1-218-668-11	s	METAL 100 0.50% 1/16W
R75	1-218-708-11	s	METAL 4.7K 0.50% 1/16W
R76	1-218-700-11	s	METAL 2.2K 0.50% 1/16W
R77	1-218-668-11	s	METAL 100 0.50% 1/16W
R78	1-218-668-11	s	METAL 100 0.50% 1/16W
R79	1-218-700-11	s	METAL 2.2K 0.50% 1/16W
R80	1-218-668-11	s	METAL 100 0.50% 1/16W
R81	1-218-708-11	s	METAL 4.7K 0.50% 1/16W

(IE-34 BOARD)

Ref. No. or Q'ty	Part No.	SP	Description
R82	1-216-821-11	s	METAL, CHIP 1K 5% 1/16W
R83	1-218-675-11	s	METAL 200 0.50% 1/16W
R84	1-216-821-11	s	METAL, CHIP 1K 5% 1/16W
R85	1-218-672-11	s	METAL 150 0.50% 1/16W
R86	1-218-708-11	s	METAL 4.7K 0.50% 1/16W
R87	1-218-668-11	s	METAL 100 0.50% 1/16W
R88	1-218-700-11	s	METAL 2.2K 0.50% 1/16W
R89	1-218-668-11	s	METAL 100 0.50% 1/16W
R90	1-218-700-11	s	METAL 2.2K 0.50% 1/16W
R91	1-218-664-11	s	METAL 68 0.50% 1/16W
R92	1-216-821-11	s	METAL, CHIP 1K 5% 1/16W
R93	1-218-706-11	s	METAL 3.9K 0.50% 1/16W
R94	1-218-701-11	s	METAL 2.4K 0.50% 1/16W
R95	1-218-716-11	s	METAL 10K 0.50% 1/16W
R96	1-218-720-11	s	METAL 15K 0.50% 1/16W
R97	1-218-716-11	s	METAL 10K 0.50% 1/16W
R98	1-216-823-11	s	METAL, CHIP 1.5K 5% 1/16W
R99	1-218-704-11	s	METAL 3.3K 0.50% 1/16W
R101	1-218-716-11	s	METAL 10K 0.50% 1/16W
R102	1-218-701-11	s	METAL 2.4K 0.50% 1/16W
R103	1-218-700-11	s	METAL 2.2K 0.50% 1/16W
R104	1-218-745-11	s	METAL 160K 0.50% 1/16W
R106	1-218-668-11	s	METAL 100 0.50% 1/16W
R107	1-218-716-11	s	METAL 10K 0.50% 1/16W
R112	1-218-716-11	s	METAL 10K 0.50% 1/16W
R113	1-216-806-11	s	METAL 56 0.50% 1/16W
R115	1-218-289-11	s	METAL, CHIP 510 5% 1/16W
R116	1-218-716-11	s	METAL 10K 0.50% 1/16W
R117	1-218-725-11	s	METAL 24K 0.50% 1/16W
R118	1-218-721-11	s	METAL 16K 0.50% 1/16W
R119	1-218-745-11	s	METAL 160K 0.50% 1/16W
R120	1-216-821-11	s	METAL, CHIP 1K 5% 1/16W
R121	1-218-664-11	s	METAL 68 0.50% 1/16W
RV1	1-237-033-11	s	RES, ADJ, METAL 1K
RV2	1-228-475-00	s	RES, ADJ, METAL 20K
RV3	1-237-032-11	s	RES, ADJ, METAL 500
RV4	1-228-471-00	s	RES, ADJ, METAT 1K
RV5	1-228-474-00	s	RES, ADJ, METAL 10K
RV6	1-228-469-00	s	RES, ADJ, METAL 200
RV7	1-228-469-00	s	RES, ADJ, METAL 200
RV8	1-237-030-11	s	RES, ADJ, CERMET 100
RV9	1-237-029-11	s	RES, ADJ, METAL 50

IF-346 BOARD

Ref. No. or Q'ty	Part No.	SP	Description
1pc	A-8271-415-A	o	MOUNTED CIRCUIT BOARD, IF-346
1pc	1-642-621-11	o	PRINTED CIRCUIT BOARD, SW-489
1pc	7-621-772-18	s	SCREW +B 2X4
2pcs	3-175-429-01	s	KNOB, PULL OUT
2pcs	7-627-553-68	s	SCREW, PRECISION +P 2X6
1pc	7-621-772-18	s	SCREW +B 2X4
1pc	3-176-519-11	o	BRACKET, L
C1	1-164-156-11	s	CERAMIC 0.1uF 25V0%
C2	1-164-156-11	s	CERAMIC 0.1uF 25V0%
C3	1-164-156-11	s	CERAMIC 0.1uF 25V0%
C5	1-135-216-11	s	TANTALUM, CHIP 10uF 20% 10V
C6	1-164-156-11	s	CERAMIC 0.1uF 25V0%
C7	1-164-156-11	s	CERAMIC 0.1uF 25V0%
C8	1-162-919-11	s	CERAMIC, CHIP 22PF 5% 50V
C9	1-162-919-11	s	CERAMIC, CHIP 22PF 5% 50V
C10	1-135-216-11	s	TANTALUM, CHIP 10uF 20% 10V
C11	1-164-156-11	s	CERAMIC 0.1uF 25V0%
C12	1-135-216-11	s	TANTALUM, CHIP 10uF 20% 10V
C13	1-164-156-11	s	CERAMIC 0.1uF 25V0%
C14	1-164-156-11	s	CERAMIC 0.1uF 25V0%
C15	1-164-156-11	s	CERAMIC 0.1uF 25V0%
C16	1-164-156-11	s	CERAMIC 0.1uF 25V0%
C17	1-164-156-11	s	CERAMIC 0.1uF 25V0%
C18	1-164-156-11	s	CERAMIC 0.1uF 25V0%
C19	1-164-156-11	s	CERAMIC 0.1uF 25V0%
C20	1-164-156-11	s	CERAMIC 0.1uF 25V0%
C21	1-125-513-11	s	CAP, DOUBLE LAYERS 0.047F
C22	1-162-970-11	s	CERAMIC, CHIP 0.01uF 10% 25V
C23	1-164-156-11	s	CERAMIC 0.1uF 25V0%
C24	1-164-156-11	s	CERAMIC 0.1uF 25V0%
C25	1-164-156-11	s	CERAMIC 0.1uF 25V0%
C26	1-162-921-11	s	CERAMIC, CHIP 33PF 5% 50V
C27	1-164-156-11	s	CERAMIC 0.1uF 25V0%
C28	1-135-076-21	s	TANTALUM, CHIP 1uF 10% 35V
C29	1-162-919-11	s	CERAMIC, CHIP 22PF 5% 50V
C30	1-162-919-11	s	CERAMIC, CHIP 22PF 5% 50V
C31	1-135-161-21	s	TANTALUM, CHIP 22uF 10% 10V
C32	1-135-161-21	s	TANTALUM, CHIP 22uF 10% 10V
C33	1-135-076-21	s	TANTALUM, CHIP 1uF 10% 35V
C34	1-135-177-21	s	TANTALUM, CHIP 1uF 10% 25V
C35	1-135-161-21	s	TANTALUM, CHIP 22uF 10% 10V
C36	1-135-161-21	s	TANTALUM, CHIP 22uF 10% 10V
C37	1-135-159-21	s	TANTALUM, CHIP 10uF 10% 20V
C38	1-162-927-11	s	CERAMIC, CHIP 100PF 5% 50V
C39	1-162-927-11	s	CERAMIC, CHIP 100PF 5% 50V
C40	1-135-177-21	s	TANTALUM, CHIP 1uF 10% 25V
C41	1-135-177-21	s	TANTALUM, CHIP 1uF 10% 25V
C42	1-162-927-11	s	CERAMIC, CHIP 100PF 5% 50V
CN1	1-691-847-11	s	CONNECTOR, BOARD TO BOARD 50P
CN2	1-566-102-11	o	PIN, BOARD TO BOARD 18P
CNI5	1-540-253-11	s	SOCKET, IC (PLCC)
CNI8	1-540-151-11	s	SOCKET, IC
CV1	1-141-370-11	s	CAP, CHIP TRIMMER
D1	8-719-800-76	s	DIODE 1SS226
D2	8-719-800-76	s	DIODE 1SS226
D3	8-719-800-76	s	DIODE 1SS226

(IF-346 BOARD)

Ref. No. or Q'ty	Part No.	SP	Description
D504	8-719-800-76	s	DIODE 1SS226
D505	8-719-800-76	s	DIODE 1SS226
D506	8-719-800-76	s	DIODE 1SS226
D507	8-719-800-76	s	DIODE 1SS226
D508	8-719-800-76	s	DIODE 1SS226
IC1	8-759-973-71	s	IC TL7705CPS-B
IC2	8-759-101-12	s	IC UPC311G2
IC5	8-759-054-59	s	IC HD6475208CP
IC6	8-759-142-20	s	IC UPC4062G2
IC7	8-759-063-09	o	IC 9800-IF346-V1.0
IC8	8-759-063-19	o	IC 27C512-PADP-V1.0
IC9	8-759-322-72	s	IC HM6264ALFP-10
IC11	8-759-926-82	s	IC SN74HC574ANS
IC12	8-759-926-82	s	IC SN74HC574ANS
IC13	8-759-926-82	s	IC SN74HC574ANS
IC14	8-759-201-61	s	IC TC40H004F
IC15	8-759-054-57	s	IC UPD6453GT-101
IC16	8-759-054-58	s	IC AD7542JP
IC17	8-759-054-58	s	IC AD7542JP
IC18	8-759-142-19	s	IC UPC4064G
IC19	8-759-234-77	s	IC TC4S66F
IC20	8-759-234-77	s	IC TC4S66F
IC21	8-759-142-19	s	IC UPC4064G
IC22	8-759-066-68	s	IC REF-03GS
L1	1-410-389-31	s	INDUCTOR, CHIP 47uH
L2	1-408-777-00	s	INDUCTOR, CHIP 10uH
Q1	8-729-117-16	s	TRANSISTOR 2SA1611-M6
Q2	8-729-117-32	s	TRANSISTOR 2SC4177
Q3	8-729-117-16	s	TRANSISTOR 2SA1611-M6
Q4	8-729-920-99	s	TRANSISTOR DTA114EU
Q5	8-729-920-99	s	TRANSISTOR DTA114EU
Q6	8-729-805-25	s	TRANSISTOR 2SB1121-S
Q7	8-729-807-16	s	TRANSISTOR 2SD1621-R
Q8	8-729-117-32	s	TRANSISTOR 2SC4177
Q9	8-729-117-16	s	TRANSISTOR 2SA1611-M6
Q10	8-729-117-16	s	TRANSISTOR 2SA1611-M6
Q11	8-729-117-32	s	TRANSISTOR 2SC4177
R1	1-218-740-11	s	METAL 100K 0.50% 1/16W
R2	1-218-668-11	s	METAL 100 0.50% 1/16W
R3	1-218-740-11	s	METAL 100K 0.50% 1/16W
R4	1-218-344-11	s	METAL 7.5K 0.50% 1/16W (S/N 10001-10100)
R4	1-218-795-11	s	METAL 6.8K 0.50% 1/16W
R5	1-218-740-11	s	METAL 100K 0.50% 1/16W
R6	1-218-700-11	s	METAL 2.2K 0.50% 1/16W
R7	1-216-795-11	s	METAL 6.8K 0.50% 1/16W
R8	1-218-740-11	s	METAL 100K 0.50% 1/16W
R9	1-218-740-11	s	METAL 100K 0.50% 1/16W
R10	1-218-704-11	s	METAL 3.3K 0.50% 1/16W
R11	1-218-708-11	s	METAL 4.7K 0.50% 1/16W
R12	1-218-668-11	s	METAL 100 0.50% 1/16W
R13	1-218-704-11	s	METAL 3.3K 0.50% 1/16W
R14	1-218-700-11	s	METAL 2.2K 0.50% 1/16W
R15	1-218-700-11	s	METAL 2.2K 0.50% 1/16W
R16	1-218-668-11	s	METAL 100 0.50% 1/16W
R17	1-218-708-11	s	METAL 4.7K 0.50% 1/16W
R18	1-218-668-11	s	METAL 100 0.50% 1/16W

(IF-346 BOARD)

Ref. No. or Q'ty	Part No.	SP	Description
R20	1-216-821-11	s	METAL, CHIP 1K 5% 1/16W
R21	1-218-668-11	s	METAL 100 0.50% 1/16W
R22	1-218-716-11	s	METAL 10K 0.50% 1/16W
R23	1-218-716-11	s	METAL 10K 0.50% 1/16W
R24	1-218-883-11	s	METAL 33K 0.50% 1/16W
R25	1-218-883-11	s	METAL 33K 0.50% 1/16W
R26	1-218-883-11	s	METAL 33K 0.50% 1/16W
R27	1-218-883-11	s	METAL 33K 0.50% 1/16W
R28	1-216-821-11	s	METAL, CHIP 1K 5% 1/16W
R29	1-216-821-11	s	METAL, CHIP 1K 5% 1/16W
R30	1-216-821-11	s	METAL, CHIP 1K 5% 1/16W
R31	1-216-821-11	s	METAL, CHIP 1K 5% 1/16W
R32	1-216-821-11	s	METAL, CHIP 1K 5% 1/16W
R33	1-218-883-11	s	METAL 33K 0.50% 1/16W
R34	1-218-883-11	s	METAL 33K 0.50% 1/16W
R35	1-218-716-11	s	METAL 10K 0.50% 1/16W
R36	1-218-708-11	s	METAL 4.7K 0.50% 1/16W
R37	1-218-716-11	s	METAL 10K 0.50% 1/16W
R38	1-218-716-11	s	METAL 10K 0.50% 1/16W
R39	1-218-668-11	s	METAL 100 0.50% 1/16W
R40	1-218-883-11	s	METAL 33K 0.50% 1/16W
R41	1-218-883-11	s	METAL 33K 0.50% 1/16W
R42	1-218-883-11	s	METAL 33K 0.50% 1/16W
R43	1-218-883-11	s	METAL 33K 0.50% 1/16W
R44	1-218-883-11	s	METAL 33K 0.50% 1/16W
R45	1-218-883-11	s	METAL 33K 0.50% 1/16W
R46	1-218-883-11	s	METAL 33K 0.50% 1/16W
R47	1-218-883-11	s	METAL 33K 0.50% 1/16W
R48	1-218-883-11	s	METAL 33K 0.50% 1/16W
R49	1-218-883-11	s	METAL 33K 0.50% 1/16W
R50	1-218-883-11	s	METAL 33K 0.50% 1/16W
R51	1-218-883-11	s	METAL 33K 0.50% 1/16W
R52	1-218-883-11	s	METAL 33K 0.50% 1/16W
R53	1-218-883-11	s	METAL 33K 0.50% 1/16W
R54	1-218-883-11	s	METAL 33K 0.50% 1/16W
R55	1-218-883-11	s	METAL 33K 0.50% 1/16W
R56	1-218-676-11	s	METAL 220 0.50% 1/16W
R57	1-218-676-11	s	METAL 220 0.50% 1/16W
R58	1-218-676-11	s	METAL 220 0.50% 1/16W
R59	1-218-676-11	s	METAL 220 0.50% 1/16W
R60	1-216-817-11	s	METAL, CHIP 470 5% 1/16W
R61	1-216-817-11	s	METAL, CHIP 470 5% 1/16W
R62	1-218-716-11	s	METAL 10K 0.50% 1/16W
R63	1-218-740-11	s	METAL 100K 0.50% 1/16W
R64	1-218-668-11	s	METAL 100 0.50% 1/16W
R65	1-216-821-11	s	METAL, CHIP 1K 5% 1/16W
R66	1-216-821-11	s	METAL, CHIP 1K 5% 1/16W
R67	1-218-668-11	s	METAL 100 0.50% 1/16W
R68	1-218-668-11	s	METAL 100 0.50% 1/16W
R69	1-218-676-11	s	METAL 220 0.50% 1/16W
R70	1-218-676-11	s	METAL 220 0.50% 1/16W
R71	1-218-724-11	s	METAL 22K 0.50% 1/16W
R72	1-218-724-11	s	METAL 22K 0.50% 1/16W
R73	1-216-817-11	s	METAL, CHIP 470 5% 1/16W
R74	1-216-817-11	s	METAL, CHIP 470 5% 1/16W
R75	1-216-817-11	s	METAL, CHIP 470 5% 1/16W
R76	1-216-817-11	s	METAL, CHIP 470 5% 1/16W
R77	1-218-700-11	s	METAL 2.2K 0.50% 1/16W
R78	1-218-700-11	s	METAL 2.2K 0.50% 1/16W

(IF-346 BOARD)

Ref. No. or Q'ty	Part No.	SP	Description
R79	1-216-864-11	s	METAL, CHIP 0-OHM
R80	1-216-821-11	s	METAL, CHIP 1K 5% 1/16W
R81	1-216-821-11	s	METAL, CHIP 1K 5% 1/16W
R82	1-218-668-11	s	METAL 100 0.50% 1/16W
R83	1-218-668-11	s	METAL 100 0.50% 1/16W
R84	1-216-821-11	s	METAL, CHIP 1K 5% 1/16W
R85	1-218-716-11	s	METAL 10K 0.50% 1/16W
R86	1-218-716-11	s	METAL 10K 0.50% 1/16W
R87	1-218-724-11	s	METAL 22K 0.50% 1/16W
R88	1-218-724-11	s	METAL 22K 0.50% 1/16W
R89	1-216-821-11	s	METAL, CHIP 1K 5% 1/16W
R90	1-218-668-11	s	METAL 100 0.50% 1/16W
R91	1-216-838-11	s	METAL, CHIP 27K 5% 1/16W
R92	1-218-716-11	s	METAL 10K 0.50% 1/16W
R93	1-218-678-11	s	METAL 270 0.50% 1/16W
R93	1-218-754-11	s	METAL 120K 0.50% 1/16W (S/N 10001-10100)
RV501	1-237-034-11	s	RES, ADJ, METAL 2K
RV502	1-237-034-11	s	RES, ADJ, METAL 2K
S1	1-554-371-51	s	SWITCH, TACTILE
S2	1-572-565-11	s	SWITCH, DIP
S101	1-553-977-00	s	SWITCH, SLIDE
S102	1-553-977-00	s	SWITCH, SLIDE
S103	1-553-977-00	s	SWITCH, SLIDE
S104	1-553-977-00	s	SWITCH, SLIDE
S105	1-553-977-00	s	SWITCH, SLIDE
S106	1-553-977-00	s	SWITCH, SLIDE
S107	1-553-977-00	s	SWITCH, SLIDE
S108	1-553-977-00	s	SWITCH, SLIDE
S109	1-553-977-00	s	SWITCH, SLIDE
S110	1-553-977-00	s	SWITCH, SLIDE
S111	1-553-977-00	s	SWITCH, SLIDE
S112	1-553-977-00	s	SWITCH, SLIDE
S113	1-553-977-00	s	SWITCH, SLIDE
S114	1-553-977-00	s	SWITCH, SLIDE
S115	1-553-977-00	s	SWITCH, SLIDE
S116	1-553-977-00	s	SWITCH, SLIDE
X1	1-579-594-11	s	VIBRATOR, CRYSTAL 19.6608MHz

MA-48 BOARD

Ref. No. or Q'ty	Part No.	SP	Description
1pc	A-8271-404-A	o	MOUNTED CIRCUIT BOARD, MA-48
C1	1-164-156-11	s	CERAMIC 0.1uF 25V0%
C2	1-164-156-11	s	CERAMIC 0.1uF 25V0%
C3	1-164-315-11	s	CERAMIC 470PF 5% 50V
C4	1-164-315-11	s	CERAMIC 470PF 5% 50V
C5	1-126-403-11	s	ELECT 3.3uF 20% 50V
C6	1-126-405-11	s	ELECT 10uF 20% 50V
C7	1-126-405-11	s	ELECT 10uF 20% 50V
C8	1-164-156-11	s	CERAMIC 0.1uF 25V0%
C9	1-162-960-11	s	CERAMIC 220PF 10% 50V
C10	1-162-960-11	s	CERAMIC 220PF 10% 50V
C11	1-164-156-11	s	CERAMIC 0.1uF 25V0%
C12	1-164-156-11	s	CERAMIC 0.1uF 25V0%
C13	1-126-392-11	s	ELECT, CHIP 100uF 20% 6.3V
C14	1-164-156-11	s	CERAMIC 0.1uF 25V0%
C15	1-126-392-11	s	ELECT, CHIP 100uF 20% 6.3V
C16	1-135-216-11	s	TANTALUM, CHIP 10uF 20% 10V
C17	1-135-216-11	s	TANTALUM, CHIP 10uF 20% 10V
C18	1-164-156-11	s	CERAMIC 0.1uF 25V0%
C19	1-164-156-11	s	CERAMIC 0.1uF 25V0%
C20	1-164-315-11	s	CERAMIC 470PF 5% 50V
C21	1-164-315-11	s	CERAMIC 470PF 5% 50V
C22	1-126-403-11	s	ELECT 3.3uF 20% 50V
C23	1-126-405-11	s	ELECT 10uF 20% 50V
C24	1-126-405-11	s	ELECT 10uF 20% 50V
C25	1-164-156-11	s	CERAMIC 0.1uF 25V0%
C26	1-162-960-11	s	CERAMIC 220PF 10% 50V
C27	1-162-960-11	s	CERAMIC 220PF 10% 50V
C28	1-164-156-11	s	CERAMIC 0.1uF 25V0%
C29	1-126-399-11	s	ELECT, CHIP 10uF 20% 35V
C30	1-164-156-11	s	CERAMIC 0.1uF 25V0%
C31	1-164-156-11	s	CERAMIC 0.1uF 25V0%
C32	1-164-156-11	s	CERAMIC 0.1uF 25V0%
C33	1-164-156-11	s	CERAMIC 0.1uF 25V0%
C34	1-164-156-11	s	CERAMIC 0.1uF 25V0%
C35	1-164-156-11	s	CERAMIC 0.1uF 25V0%
C36	1-126-392-11	s	ELECT, CHIP 100uF 20% 6.3V
C37	1-162-927-11	s	CERAMIC, CHIP 100PF 5% 50V
C38	1-164-156-11	s	CERAMIC 0.1uF 25V0%
C39	1-164-361-11	s	CERAMIC 0.047uF 16V
C40	1-126-923-11	s	ELECT 220uF 20% 10V
C41	1-164-156-11	s	CERAMIC 0.1uF 25V0%
C42	1-162-927-11	s	CERAMIC, CHIP 100PF 5% 50V
C43	1-164-361-11	s	CERAMIC 0.047uF 16V
C44	1-126-923-11	s	ELECT 220uF 20% 10V
C46	1-126-396-11	s	ELECT, CHIP 47uF 20% 16V
C47	1-126-396-11	s	ELECT, CHIP 47uF 20% 16V
C48	1-162-970-11	s	CERAMIC, CHIP 0.01uF 10% 25V
C49	1-162-970-11	s	CERAMIC, CHIP 0.01uF 10% 25V
C50	1-126-392-11	s	ELECT, CHIP 100uF 20% 6.3V
CN481	1-580-561-11	o	PIN, CONNECTOR (PC BOARD) 12P
CN482	1-580-561-11	o	PIN, CONNECTOR (PC BOARD) 12P
CN483	1-580-559-11	o	PIN, CONNECTOR (PC BOARD) 8P
CN484	1-580-557-11	o	PIN, CONNECTOR (PC BOARD) 4P
CN485	1-580-557-11	o	PIN, CONNECTOR (PC BOARD) 4P
CP1	1-464-758-11	s	CONVERTER, DC-DC (CD-54)
D1	8-719-800-76	s	DIODE 1SS226

(MA-48 BOARD)

Ref. No. or Q'ty	Part No.	SP	Description
D2	8-719-800-76	s	DIODE 1SS226
D3	8-719-800-76	s	DIODE 1SS226
D4	8-719-800-76	s	DIODE 1SS226
IC1	8-759-631-57	s	IC M5220FP
IC2	8-759-631-57	s	IC M5220FP
IC3	8-759-142-20	s	IC UPC4062G2
IC6	8-759-512-09	s	IC NJM386BM
IC7	8-759-512-09	s	IC NJM386BM
L1	1-410-380-31	s	INDUCTOR, CHIP 8.2uH
L2	1-410-380-31	s	INDUCTOR, CHIP 8.2uH
L3	1-410-380-31	s	INDUCTOR, CHIP 8.2uH
L4	1-410-380-31	s	INDUCTOR, CHIP 8.2uH
L5	1-410-389-31	s	INDUCTOR, CHIP 47uH
Q1	8-729-805-25	s	TRANSISTOR 2SB1121-S
Q2	8-729-117-32	s	TRANSISTOR 2SC4177
Q3	8-729-117-16	s	TRANSISTOR 2SA1611-M6
Q4	8-729-807-16	s	TRANSISTOR 2SD1621-R
Q5	8-729-807-16	s	TRANSISTOR 2SD1621-R
R1	1-218-700-11	s	METAL 2.2K 0.50% 1/16W
R2	1-218-700-11	s	METAL 2.2K 0.50% 1/16W
R3	1-218-700-11	s	METAL 2.2K 0.50% 1/16W
R4	1-218-700-11	s	METAL 2.2K 0.50% 1/16W
R5	1-218-700-11	s	METAL 2.2K 0.50% 1/16W
R6	1-218-700-11	s	METAL 2.2K 0.50% 1/16W
R7	1-218-672-11	s	METAL 150 0.50% 1/16W
R8	1-218-672-11	s	METAL 150 0.50% 1/16W
R9	1-216-821-11	s	METAL, CHIP 1K 5% 1/16W
R10	1-218-708-11	s	METAL 4.7K 0.50% 1/16W
R11	1-218-740-11	s	METAL 100K 0.50% 1/16W
R12	1-218-740-11	s	METAL 100K 0.50% 1/16W
R13	1-218-704-11	s	METAL 3.3K 0.50% 1/16W
R15	1-218-344-11	s	METAL 7.5K 0.50% 1/16W
R16	1-218-484-11	s	METAL 750 0.50% 1/16W
R17	1-218-720-11	s	METAL 15K 0.50% 1/16W
R18	1-218-720-11	s	METAL 15K 0.50% 1/16W
R19	1-216-797-11	s	METAL, CHIP 10 5% 1/16W
R20	1-216-797-11	s	METAL, CHIP 10 5% 1/16W
R21	1-218-675-11	s	METAL 200 0.50% 1/16W
R22	1-216-821-11	s	METAL, CHIP 1K 5% 1/16W
R23	1-216-821-11	s	METAL, CHIP 1K 5% 1/16W
R24	1-216-821-11	s	METAL, CHIP 1K 5% 1/16W
R25	1-218-675-11	s	METAL 200 0.50% 1/16W
R26	1-216-821-11	s	METAL, CHIP 1K 5% 1/16W
R27	1-216-821-11	s	METAL, CHIP 1K 5% 1/16W
R28	1-216-821-11	s	METAL, CHIP 1K 5% 1/16W
R29	1-218-716-11	s	METAL 10K 0.50% 1/16W
R30	1-216-834-11	s	METAL, CHIP 12K 5% 1/16W
R31	1-218-716-11	s	METAL 10K 0.50% 1/16W
R32	1-218-716-11	s	METAL 10K 0.50% 1/16W
R33	1-218-716-11	s	METAL 10K 0.50% 1/16W
R34	1-218-716-11	s	METAL 10K 0.50% 1/16W
R35	1-218-716-11	s	METAL 10K 0.50% 1/16W
R36	1-216-834-11	s	METAL, CHIP 12K 5% 1/16W
R37	1-218-700-11	s	METAL 2.2K 0.50% 1/16W
R38	1-218-700-11	s	METAL 2.2K 0.50% 1/16W
R39	1-218-700-11	s	METAL 2.2K 0.50% 1/16W
R40	1-218-700-11	s	METAL 2.2K 0.50% 1/16W
R41	1-218-700-11	s	METAL 2.2K 0.50% 1/16W

(MA-48 BOARD)

Ref. No. or Q'ty	Part No.	SP	Description
R42	1-218-700-11	s	METAL 2.2K 0.50% 1/16W
R43	1-218-672-11	s	METAL 150 0.50% 1/16W
R44	1-218-672-11	s	METAL 150 0.50% 1/16W
R45	1-216-821-11	s	METAL, CHIP 1K 5% 1/16W
R46	1-218-708-11	s	METAL 4.7K 0.50% 1/16W
R47	1-218-740-11	s	METAL 100K 0.50% 1/16W
R48	1-218-740-11	s	METAL 100K 0.50% 1/16W
R49	1-218-704-11	s	METAL 3.3K 0.50% 1/16W
R51	1-218-344-11	s	METAL 7.5K 0.50% 1/16W
R52	1-218-484-11	s	METAL 750 0.50% 1/16W
R53	1-218-720-11	s	METAL 15K 0.50% 1/16W
R54	1-218-720-11	s	METAL 15K 0.50% 1/16W
R55	1-216-797-11	s	METAL, CHIP 10 5% 1/16W
R56	1-216-797-11	s	METAL, CHIP 10 5% 1/16W
R57	1-218-740-11	s	METAL 100K 0.50% 1/16W
R58	1-218-664-11	s	METAL 68 0.50% 1/16W
R59	1-218-664-11	s	METAL 68 0.50% 1/16W
R60	1-218-664-11	s	METAL 68 0.50% 1/16W
R61	1-218-664-11	s	METAL 68 0.50% 1/16W
R62	1-218-664-11	s	METAL 68 0.50% 1/16W
R63	1-216-298-00	s	METAL, CHIP 2.2 5% 1/10W
R64	1-216-298-00	s	METAL, CHIP 2.2 5% 1/10W
R65	1-218-664-11	s	METAL 68 0.50% 1/16W
R79	1-218-716-11	s	METAL 10K 0.50% 1/16W
R80	1-218-272-11	s	METAL 5.1K 0.50% 1/16W
R81	1-216-821-11	s	METAL, CHIP 1K 5% 1/16W
R82	1-216-797-11	s	METAL, CHIP 10 5% 1/16W
R83	1-218-716-11	s	METAL 10K 0.50% 1/16W
R84	1-216-821-11	s	METAL, CHIP 1K 5% 1/16W
R85	1-216-797-11	s	METAL, CHIP 10 5% 1/16W
R86	1-218-721-11	s	METAL 16K 0.50% 1/16W
R87	1-216-821-11	s	METAL, CHIP 1K 5% 1/16W
R88	1-218-680-11	s	METAL 330 0.50% 1/16W
R89	1-218-680-11	s	METAL 330 0.50% 1/16W
RV1	1-228-474-00	s	RES, ADJ, METAL 10K
S1	1-571-658-11	s	SWITCH, SLIDE
S2	1-571-658-11	s	SWITCH, SLIDE
S3	1-570-675-11	s	SWITCH, SLIDE
S4	1-570-675-11	s	SWITCH, SLIDE
S5	1-571-674-11	s	SWITCH, SLIDE

MB-366 BOARD

Ref. No. or Q'ty	Part No.	SP	Description
1pc	A-8271-407-A	o	MOUNTED CIRCUIT BOARD, MB-366
1pc	⚠1-576-260-51	s	FUSE, MICRO (SECONDARY) 10A 125V
12pcs	7-627-553-68	s	SCREW, PRECISION +P 2X6
C1	1-127-519-11	s	ELECT (SOLID) 100uF 20% 20V
C2	1-127-518-11	s	ELECT (SOLID) 100uF 20% 16V
C3	1-127-518-11	s	ELECT (SOLID) 100uF 20% 16V
C4	1-128-528-11	s	ELECT 470uF 20% 25V (S/N 10001-10100)
C4	1-135-161-21	s	TANTALUM, CHIP 22uF 10% 10V
C5	1-136-165-00	s	FILM 0.1uF 5% 50V (S/N 10001-10100)
C5	1-164-156-11	s	CERAMIC 0.1uF 25V0%
C6	1-164-156-11	s	CERAMIC 0.1uF 25V0%
C7	1-164-156-11	s	CERAMIC 0.1uF 25V0%
C8	1-128-528-11	s	ELECT 470uF 20% 25V
C9	1-136-165-00	s	FILM 0.1uF 5% 50V
C10	1-164-156-11	s	CERAMIC 0.1uF 25V0%
C11	1-164-156-11	s	CERAMIC 0.1uF 25V0%
C12	1-164-156-11	s	CERAMIC 0.1uF 25V0%
C13	1-164-156-11	s	CERAMIC 0.1uF 25V0%
C14	1-126-516-11	s	ELECT 120uF 20% 16V
C15	1-164-156-11	s	CERAMIC 0.1uF 25V0%
C20	1-164-156-11	s	CERAMIC 0.1uF 25V0%
CN1	1-691-845-11	o	CONNECTOR, BOARD TO BOARD 50P
CN2	1-691-845-11	o	CONNECTOR, BOARD TO BOARD 50P
CN3	1-691-845-11	o	CONNECTOR, BOARD TO BOARD 50P
CN4	1-691-845-11	o	CONNECTOR, BOARD TO BOARD 50P
CN5	1-691-845-11	o	CONNECTOR, BOARD TO BOARD 50P
CN6	1-691-845-11	o	CONNECTOR, BOARD TO BOARD 50P
CN8	1-580-535-11	o	PIN, CONNECTOR (PC BOARD) 12P
CN9	1-580-532-11	o	PIN, CONNECTOR (PC BOARD) 6P
CN10	1-580-534-11	o	PIN, CONNECTOR (PC BOARD) 10P
CN11	1-580-531-11	o	PIN, CONNECTOR (PC BOARD) 4P
CN12	1-580-531-11	o	PIN, CONNECTOR (PC BOARD) 4P
CN14	1-580-542-11	o	PIN, CONNECTOR (PC BOARD) 26P
CN15	1-580-535-11	o	PIN, CONNECTOR (PC BOARD) 12P
CN16	1-580-532-11	o	PIN, CONNECTOR (PC BOARD) 6P
CN17	1-580-532-11	o	PIN, CONNECTOR (PC BOARD) 6P
CN18	1-580-533-11	s	PIN, CONNECTOR (PC BOARD) 8P
CN19	1-580-535-11	o	PIN, CONNECTOR (PC BOARD) 12P
CN22	1-580-533-11	s	PIN, CONNECTOR (PC BOARD) 8P
CN23	1-540-260-11	s	SOCKET, MICRO FUSE
CN24	1-540-260-11	s	SOCKET, MICRO FUSE
CN25	1-580-532-11	o	PIN, CONNECTOR (PC BOARD) 6P
CN27	1-580-533-11	s	PIN, CONNECTOR (PC BOARD) 8P
CN28	1-580-535-11	o	PIN, CONNECTOR (PC BOARD) 12P
CN29	1-691-843-11	s	CONNECTOR, COAXIAL
CN30	1-691-843-11	s	CONNECTOR, COAXIAL
CN31	1-691-843-11	s	CONNECTOR, COAXIAL
CN32	1-691-843-11	s	CONNECTOR, COAXIAL
CN33	1-691-843-11	s	CONNECTOR, COAXIAL
CN34	1-691-843-11	s	CONNECTOR, COAXIAL
CN35	1-691-843-11	s	CONNECTOR, COAXIAL
CN36	1-691-843-11	s	CONNECTOR, COAXIAL
CN37	1-691-843-11	s	CONNECTOR, COAXIAL
CN38	1-508-734-00	o	PIN, CONNECTOR 3P
D1	8-719-023-54	s	DIODE EA60QC06-F
D2	8-719-800-76	s	DIODE 1SS226
D3	8-719-210-43	s	DIODE EC10QS-06
D4	8-719-210-43	s	DIODE EC10QS-06
D5	8-719-800-76	s	DIODE 1SS226
D6	8-719-800-76	s	DIODE 1SS226
D7	8-719-800-76	s	DIODE 1SS226
D8	8-719-023-54	s	DIODE EA60QC06-F
IC2	8-759-300-71	s	IC MC14053BF
IC3	8-759-073-40	s	IC SN75ALS181NS
IC4	8-759-926-45	s	IC SN74HC241ANS
IC5	8-759-142-20	s	IC UPC4062G2
LY1	1-515-898-11	s	RELAY
Q1	8-729-117-32	s	TRANSISTOR 2SC4177
Q2	8-729-117-32	s	TRANSISTOR 2SC4177
Q3	8-729-920-99	s	TRANSISTOR DTA114EU
Q4	8-729-805-25	s	TRANSISTOR 2SB1121-S
Q5	8-729-117-32	s	TRANSISTOR 2SC4177
R1	1-218-668-11	s	METAL 100 0.50% 1/16W
R2	1-218-668-11	s	METAL 100 0.50% 1/16W
R3	1-218-883-11	s	METAL 33K 0.50% 1/16W
R4	1-218-288-11	s	METAL, CHIP 300 5% 1/16W
R5	1-218-883-11	s	METAL 33K 0.50% 1/16W
R6	1-216-846-11	s	METAL, CHIP 120K 5% 1/16W
R7	1-218-676-11	s	METAL 220 0.50% 1/16W
R8	1-218-676-11	s	METAL 220 0.50% 1/16W
R9	1-218-740-11	s	METAL 100K 0.50% 1/16W
R10	1-218-668-11	s	METAL 100 0.50% 1/16W
R11	1-218-740-11	s	METAL 100K 0.50% 1/16W
R12	1-218-720-11	s	METAL 15K 0.50% 1/16W
R13	1-218-720-11	s	METAL 15K 0.50% 1/16W
R14	1-218-295-11	s	METAL 5.6K 0.50% 1/16W
R15	1-216-821-11	s	METAL, CHIP 1K 5% 1/16W
R16	1-218-708-11	s	METAL 4.7K 0.50% 1/16W
R17	1-218-708-11	s	METAL 4.7K 0.50% 1/16W
R18	1-218-724-11	s	METAL 22K 0.50% 1/16W
R19	1-216-821-11	s	METAL, CHIP 1K 5% 1/16W
R20	1-216-797-11	s	METAL, CHIP 10 5% 1/16W
R21	1-216-797-11	s	METAL, CHIP 10 5% 1/16W
R22	1-216-797-11	s	METAL, CHIP 10 5% 1/16W

MX-33 BOARD

Ref. No. or Q'ty	Part No.	SP	Description
1pc	A-8271-410-A	o	MOUNTED CIRCUIT BOARD, MX-33
C101	1-162-970-11	s	CERAMIC, CHIP 0.01uF 10% 25V
C102	1-162-970-11	s	CERAMIC, CHIP 0.01uF 10% 25V
C103	1-162-927-11	s	CERAMIC, CHIP 100PF 5% 50V
C104	1-162-905-11	s	CERAMIC 1PF 0.25PF 50V
C105	1-162-970-11	s	CERAMIC, CHIP 0.01uF 10% 25V
C106	1-162-970-11	s	CERAMIC, CHIP 0.01uF 10% 25V
C107	1-162-927-11	s	CERAMIC, CHIP 100PF 5% 50V
C108	1-162-905-11	s	CERAMIC 1PF 0.25PF 50V
C201	1-162-970-11	s	CERAMIC, CHIP 0.01uF 10% 25V
C202	1-162-970-11	s	CERAMIC, CHIP 0.01uF 10% 25V
C203	1-162-927-11	s	CERAMIC, CHIP 100PF 5% 50V
C204	1-162-905-11	s	CERAMIC 1PF 0.25PF 50V
C205	1-162-970-11	s	CERAMIC, CHIP 0.01uF 10% 25V
C206	1-162-970-11	s	CERAMIC, CHIP 0.01uF 10% 25V
C207	1-162-927-11	s	CERAMIC, CHIP 100PF 5% 50V
C208	1-162-905-11	s	CERAMIC 1PF 0.25PF 50V
C301	1-162-970-11	s	CERAMIC, CHIP 0.01uF 10% 25V
C302	1-162-970-11	s	CERAMIC, CHIP 0.01uF 10% 25V
C303	1-162-927-11	s	CERAMIC, CHIP 100PF 5% 50V
C304	1-162-905-11	s	CERAMIC 1PF 0.25PF 50V
C305	1-162-970-11	s	CERAMIC, CHIP 0.01uF 10% 25V
C306	1-162-970-11	s	CERAMIC, CHIP 0.01uF 10% 25V
C307	1-162-927-11	s	CERAMIC, CHIP 100PF 5% 50V
C308	1-162-905-11	s	CERAMIC 1PF 0.25PF 50V
CN1	1-568-332-11	o	CONNECTOR, BOARD TO BOARD 12P
CN2	1-568-338-11	s	CONNECTOR, BOARD TO BOARD 24P
IC1	8-759-234-20	s	IC TC7S08F
IC2	8-759-234-20	s	IC TC7S08F
IC3	8-759-031-84	s	IC SC7S04F
IC101	8-759-054-61	s	IC CLC505AJE
IC102	8-759-054-61	s	IC CLC505AJE
IC201	8-759-054-61	s	IC CLC505AJE
IC202	8-759-054-61	s	IC CLC505AJE
IC301	8-759-054-61	s	IC CLC505AJE
IC302	8-759-054-61	s	IC CLC505AJE
Q1	8-729-143-14	s	TRANSISTOR 2SC4176-B35
Q2	8-729-143-14	s	TRANSISTOR 2SC4176-B35
Q101	8-729-143-14	s	TRANSISTOR 2SC4176-B35
Q102	8-729-143-14	s	TRANSISTOR 2SC4176-B35
Q103	8-729-143-14	s	TRANSISTOR 2SC4176-B35
Q104	8-729-143-14	s	TRANSISTOR 2SC4176-B35
Q201	8-729-143-14	s	TRANSISTOR 2SC4176-B35
Q202	8-729-143-14	s	TRANSISTOR 2SC4176-B35
Q203	8-729-143-14	s	TRANSISTOR 2SC4176-B35
Q204	8-729-143-14	s	TRANSISTOR 2SC4176-B35
Q301	8-729-143-14	s	TRANSISTOR 2SC4176-B35
Q302	8-729-143-14	s	TRANSISTOR 2SC4176-B35
Q303	8-729-143-14	s	TRANSISTOR 2SC4176-B35
Q304	8-729-143-14	s	TRANSISTOR 2SC4176-B35
R1	1-218-732-11	s	METAL 47K 0.50% 1/16W
R2	1-218-732-11	s	METAL 47K 0.50% 1/16W
R3	1-218-883-11	s	METAL 33K 0.50% 1/16W
R4	1-218-883-11	s	METAL 33K 0.50% 1/16W
R5	1-218-883-11	s	METAL 33K 0.50% 1/16W
R6	1-218-883-11	s	METAL 33K 0.50% 1/16W
R102	1-216-797-11	s	METAL, CHIP 10 5% 1/16W

(MX-33 BOARD)

Ref. No. or Q'ty	Part No.	SP	Description
R103	1-216-797-11	s	METAL, CHIP 10 5% 1/16W
R106	1-216-797-11	s	METAL, CHIP 10 5% 1/16W
R107	1-216-797-11	s	METAL, CHIP 10 5% 1/16W
R109	1-218-700-11	s	METAL 2.2K 0.50% 1/16W
R110	1-218-700-11	s	METAL 2.2K 0.50% 1/16W
R111	1-218-700-11	s	METAL 2.2K 0.50% 1/16W
R112	1-218-700-11	s	METAL 2.2K 0.50% 1/16W
R113	1-216-821-11	s	METAL, CHIP 1K 5% 1/16W
R114	1-216-821-11	s	METAL, CHIP 1K 5% 1/16W
R115	1-216-821-11	s	METAL, CHIP 1K 5% 1/16W
R116	1-216-821-11	s	METAL, CHIP 1K 5% 1/16W
R117	1-218-668-11	s	METAL 100 0.50% 1/16W
R118	1-218-668-11	s	METAL 100 0.50% 1/16W
R119	1-218-668-11	s	METAL 100 0.50% 1/16W
R120	1-218-700-11	s	METAL 2.2K 0.50% 1/16W
R121	1-218-668-11	s	METAL 100 0.50% 1/16W
R122	1-218-700-11	s	METAL 2.2K 0.50% 1/16W
R123	1-218-700-11	s	METAL 2.2K 0.50% 1/16W
R124	1-218-700-11	s	METAL 2.2K 0.50% 1/16W
R125	1-218-701-11	s	METAL 2.4K 0.50% 1/16W
R126	1-218-289-11	s	METAL, CHIP 510 5% 1/16W
R127	1-216-823-11	s	METAL, CHIP 1.5K 5% 1/16W
R128	1-218-736-11	s	METAL 68K 0.50% 1/16W
R130	1-216-797-11	s	METAL, CHIP 10 5% 1/16W
R131	1-216-797-11	s	METAL, CHIP 10 5% 1/16W
R134	1-216-797-11	s	METAL, CHIP 10 5% 1/16W
R135	1-216-797-11	s	METAL, CHIP 10 5% 1/16W
R137	1-218-700-11	s	METAL 2.2K 0.50% 1/16W
R138	1-218-700-11	s	METAL 2.2K 0.50% 1/16W
R139	1-218-700-11	s	METAL 2.2K 0.50% 1/16W
R140	1-218-700-11	s	METAL 2.2K 0.50% 1/16W
R141	1-216-821-11	s	METAL, CHIP 1K 5% 1/16W
R142	1-216-821-11	s	METAL, CHIP 1K 5% 1/16W
R143	1-216-821-11	s	METAL, CHIP 1K 5% 1/16W
R144	1-216-821-11	s	METAL, CHIP 1K 5% 1/16W
R145	1-218-668-11	s	METAL 100 0.50% 1/16W
R146	1-218-668-11	s	METAL 100 0.50% 1/16W
R147	1-218-668-11	s	METAL 100 0.50% 1/16W
R148	1-218-700-11	s	METAL 2.2K 0.50% 1/16W
R149	1-218-668-11	s	METAL 100 0.50% 1/16W
R150	1-218-700-11	s	METAL 2.2K 0.50% 1/16W
R151	1-218-700-11	s	METAL 2.2K 0.50% 1/16W
R152	1-218-700-11	s	METAL 2.2K 0.50% 1/16W
R153	1-218-701-11	s	METAL 2.4K 0.50% 1/16W
R154	1-218-289-11	s	METAL, CHIP 510 5% 1/16W
R155	1-216-823-11	s	METAL, CHIP 1.5K 5% 1/16W
R156	1-218-736-11	s	METAL 68K 0.50% 1/16W
R202	1-216-797-11	s	METAL, CHIP 10 5% 1/16W
R203	1-216-797-11	s	METAL, CHIP 10 5% 1/16W
R206	1-216-797-11	s	METAL, CHIP 10 5% 1/16W
R207	1-216-797-11	s	METAL, CHIP 10 5% 1/16W
R209	1-218-700-11	s	METAL 2.2K 0.50% 1/16W
R210	1-218-700-11	s	METAL 2.2K 0.50% 1/16W
R211	1-218-700-11	s	METAL 2.2K 0.50% 1/16W
R212	1-218-700-11	s	METAL 2.2K 0.50% 1/16W
R213	1-216-821-11	s	METAL, CHIP 1K 5% 1/16W
R214	1-216-821-11	s	METAL, CHIP 1K 5% 1/16W
R215	1-216-821-11	s	METAL, CHIP 1K 5% 1/16W
R216	1-216-821-11	s	METAL, CHIP 1K 5% 1/16W

(MX-33 BOARD)

Ref. No. or Q'ty	Part No.	SP	Description
R217	1-218-668-11	s	METAL 100 0.50% 1/16W
R218	1-218-668-11	s	METAL 100 0.50% 1/16W
R219	1-218-668-11	s	METAL 100 0.50% 1/16W
R220	1-218-700-11	s	METAL 2.2K 0.50% 1/16W
R221	1-218-668-11	s	METAL 100 0.50% 1/16W
R222	1-218-700-11	s	METAL 2.2K 0.50% 1/16W
R223	1-218-700-11	s	METAL 2.2K 0.50% 1/16W
R224	1-218-700-11	s	METAL 2.2K 0.50% 1/16W
R225	1-218-701-11	s	METAL 2.4K 0.50% 1/16W
R226	1-218-289-11	s	METAL, CHIP 510 5% 1/16W
R227	1-216-823-11	s	METAL, CHIP 1.5K 5% 1/16W
R228	1-218-736-11	s	METAL 68K 0.50% 1/16W
R230	1-216-797-11	s	METAL, CHIP 10 5% 1/16W
R231	1-216-797-11	s	METAL, CHIP 10 5% 1/16W
R234	1-216-797-11	s	METAL, CHIP 10 5% 1/16W
R235	1-216-797-11	s	METAL, CHIP 10 5% 1/16W
R237	1-218-700-11	s	METAL 2.2K 0.50% 1/16W
R238	1-218-700-11	s	METAL 2.2K 0.50% 1/16W
R239	1-218-700-11	s	METAL 2.2K 0.50% 1/16W
R240	1-218-700-11	s	METAL 2.2K 0.50% 1/16W
R241	1-216-821-11	s	METAL, CHIP 1K 5% 1/16W
R242	1-216-821-11	s	METAL, CHIP 1K 5% 1/16W
R243	1-216-821-11	s	METAL, CHIP 1K 5% 1/16W
R244	1-216-821-11	s	METAL, CHIP 1K 5% 1/16W
R245	1-218-668-11	s	METAL 100 0.50% 1/16W
R246	1-218-668-11	s	METAL 100 0.50% 1/16W
R247	1-218-668-11	s	METAL 100 0.50% 1/16W
R248	1-218-700-11	s	METAL 2.2K 0.50% 1/16W
R249	1-218-668-11	s	METAL 100 0.50% 1/16W
R250	1-218-700-11	s	METAL 2.2K 0.50% 1/16W
R251	1-218-700-11	s	METAL 2.2K 0.50% 1/16W
R252	1-218-700-11	s	METAL 2.2K 0.50% 1/16W
R253	1-218-701-11	s	METAL 2.4K 0.50% 1/16W
R254	1-218-289-11	s	METAL, CHIP 510 5% 1/16W
R255	1-216-823-11	s	METAL, CHIP 1.5K 5% 1/16W
R256	1-218-736-11	s	METAL 68K 0.50% 1/16W
R301	1-216-797-11	s	METAL, CHIP 10 5% 1/16W
R304	1-216-797-11	s	METAL, CHIP 10 5% 1/16W
R305	1-216-797-11	s	METAL, CHIP 10 5% 1/16W
R308	1-216-797-11	s	METAL, CHIP 10 5% 1/16W
R309	1-218-700-11	s	METAL 2.2K 0.50% 1/16W
R310	1-218-700-11	s	METAL 2.2K 0.50% 1/16W
R311	1-218-700-11	s	METAL 2.2K 0.50% 1/16W
R312	1-218-700-11	s	METAL 2.2K 0.50% 1/16W
R313	1-216-821-11	s	METAL, CHIP 1K 5% 1/16W
R314	1-216-821-11	s	METAL, CHIP 1K 5% 1/16W
R315	1-216-821-11	s	METAL, CHIP 1K 5% 1/16W
R316	1-216-821-11	s	METAL, CHIP 1K 5% 1/16W
R317	1-218-668-11	s	METAL 100 0.50% 1/16W
R318	1-218-668-11	s	METAL 100 0.50% 1/16W
R319	1-218-668-11	s	METAL 100 0.50% 1/16W
R320	1-218-700-11	s	METAL 2.2K 0.50% 1/16W
R321	1-218-668-11	s	METAL 100 0.50% 1/16W
R322	1-218-700-11	s	METAL 2.2K 0.50% 1/16W
R323	1-218-700-11	s	METAL 2.2K 0.50% 1/16W
R324	1-218-700-11	s	METAL 2.2K 0.50% 1/16W
R325	1-218-701-11	s	METAL 2.4K 0.50% 1/16W
R326	1-218-289-11	s	METAL, CHIP 510 5% 1/16W
R327	1-216-823-11	s	METAL, CHIP 1.5K 5% 1/16W
R328	1-218-736-11	s	METAL 68K 0.50% 1/16W
R329	1-216-797-11	s	METAL, CHIP 10 5% 1/16W
R332	1-216-797-11	s	METAL, CHIP 10 5% 1/16W
R333	1-216-797-11	s	METAL, CHIP 10 5% 1/16W
R336	1-216-797-11	s	METAL, CHIP 10 5% 1/16W
R337	1-218-700-11	s	METAL 2.2K 0.50% 1/16W
R338	1-218-700-11	s	METAL 2.2K 0.50% 1/16W
R339	1-218-700-11	s	METAL 2.2K 0.50% 1/16W
R340	1-218-700-11	s	METAL 2.2K 0.50% 1/16W
R341	1-216-821-11	s	METAL, CHIP 1K 5% 1/16W
R342	1-216-821-11	s	METAL, CHIP 1K 5% 1/16W
R343	1-216-821-11	s	METAL, CHIP 1K 5% 1/16W
R344	1-216-821-11	s	METAL, CHIP 1K 5% 1/16W
R345	1-218-668-11	s	METAL 100 0.50% 1/16W
R346	1-218-668-11	s	METAL 100 0.50% 1/16W
R347	1-218-668-11	s	METAL 100 0.50% 1/16W
R348	1-218-700-11	s	METAL 2.2K 0.50% 1/16W
R349	1-218-668-11	s	METAL 100 0.50% 1/16W
R350	1-218-700-11	s	METAL 2.2K 0.50% 1/16W
R351	1-218-700-11	s	METAL 2.2K 0.50% 1/16W
R352	1-218-700-11	s	METAL 2.2K 0.50% 1/16W
R353	1-218-701-11	s	METAL 2.4K 0.50% 1/16W
R354	1-218-289-11	s	METAL, CHIP 510 5% 1/16W
R355	1-216-823-11	s	METAL, CHIP 1.5K 5% 1/16W
R356	1-218-736-11	s	METAL 68K 0.50% 1/16W
RV101	1-237-034-11	s	RES, ADJ, METAL 2K
RV102	1-237-034-11	s	RES, ADJ, METAL 2K
RV103	1-237-034-11	s	RES, ADJ, METAL 2K
RV104	1-237-034-11	s	RES, ADJ, METAL 2K
RV201	1-237-034-11	s	RES, ADJ, METAL 2K
RV202	1-237-034-11	s	RES, ADJ, METAL 2K
RV203	1-237-034-11	s	RES, ADJ, METAL 2K
RV204	1-237-034-11	s	RES, ADJ, METAL 2K
RV301	1-237-034-11	s	RES, ADJ, METAL 2K
RV302	1-237-034-11	s	RES, ADJ, METAL 2K
RV303	1-237-034-11	s	RES, ADJ, METAL 2K
RV304	1-237-034-11	s	RES, ADJ, METAL 2K

PR-155 BOARD

Ref. No. or Q'ty	Part No.	SP	Description
1pc	A-8271-409-A	o	MOUNTED CIRCUIT BOARD, PR-155
2pcs	7-621-772-18	s	SCREW +B 2X4
2pcs	7-627-553-68	s	SCREW, PRECISION +P 2X6
C1	1-164-156-11	s	CERAMIC 0.1uF 25V0%
C2	1-135-157-21	s	TANTALUM, CHIP 10uF 10% 6.3V
C3	1-164-156-11	s	CERAMIC 0.1uF 25V0%
C4	1-164-156-11	s	CERAMIC 0.1uF 25V0%
C5	1-164-156-11	s	CERAMIC 0.1uF 25V0%
C6	1-164-156-11	s	CERAMIC 0.1uF 25V0%
C7	1-126-396-11	s	ELECT, CHIP 47uF 20% 16V
C8	1-162-927-11	s	CERAMIC, CHIP 100PF 5% 50V
C9	1-135-177-21	s	TANTALUM, CHIP 1uF 10% 25V
C10	1-164-156-11	s	CERAMIC 0.1uF 25V0%
C11	1-164-156-11	s	CERAMIC 0.1uF 25V0%
C12	1-126-392-11	s	ELECT, CHIP 100uF 20% 6.3V
C13	1-126-392-11	s	ELECT, CHIP 100uF 20% 6.3V
C14	1-162-927-11	s	CERAMIC, CHIP 100PF 5% 50V
C15	1-162-927-11	s	CERAMIC, CHIP 100PF 5% 50V
C16	1-135-177-21	s	TANTALUM, CHIP 1uF 10% 25V
C17	1-135-177-21	s	TANTALUM, CHIP 1uF 10% 25V
C18	1-164-156-11	s	CERAMIC 0.1uF 25V0%
C19	1-135-177-21	s	TANTALUM, CHIP 1uF 10% 25V
C20	1-164-156-11	s	CERAMIC 0.1uF 25V0%
C21	1-164-156-11	s	CERAMIC 0.1uF 25V0%
C22	1-162-927-11	s	CERAMIC, CHIP 100PF 5% 50V
C23	1-164-156-11	s	CERAMIC 0.1uF 25V0%
C24	1-164-156-11	s	CERAMIC 0.1uF 25V0%
C25	1-164-156-11	s	CERAMIC 0.1uF 25V0%
C26	1-162-970-11	s	CERAMIC, CHIP 0.01uF 10% 25V
C27	1-162-970-11	s	CERAMIC, CHIP 0.01uF 10% 25V
C28	1-162-970-11	s	CERAMIC, CHIP 0.01uF 10% 25V
C29	1-162-970-11	s	CERAMIC, CHIP 0.01uF 10% 25V
C30	1-135-155-21	s	TANTALUM, CHIP 4.7uF 10% 16V
C31	1-135-155-21	s	TANTALUM, CHIP 4.7uF 10% 16V
C32	1-135-155-21	s	TANTALUM, CHIP 4.7uF 10% 16V
C33	1-164-156-11	s	CERAMIC 0.1uF 25V0%
C34	1-164-156-11	s	CERAMIC 0.1uF 25V0%
C35	1-135-155-21	s	TANTALUM, CHIP 4.7uF 10% 16V
C36	1-135-177-21	s	TANTALUM, CHIP 1uF 10% 25V
C37	1-164-156-11	s	CERAMIC 0.1uF 25V0%
C38	1-164-156-11	s	CERAMIC 0.1uF 25V0%
C39	1-135-177-21	s	TANTALUM, CHIP 1uF 10% 25V
C40	1-164-156-11	s	CERAMIC 0.1uF 25V0%
C41	1-162-915-11	s	CERAMIC, CHIP 10PF 5PF 50V
C101	1-162-915-11	s	CERAMIC, CHIP 10PF 5PF 50V
C102	1-164-156-11	s	CERAMIC 0.1uF 25V0%
C103	1-164-156-11	s	CERAMIC 0.1uF 25V0%
C104	1-162-905-11	s	CERAMIC 1PF 0.25PF 50V
C105	1-162-927-11	s	CERAMIC, CHIP 100PF 5% 50V
C106	1-135-091-00	s	TANTALUN, CHIP 1uF 10% 16V
C107	1-164-156-11	s	CERAMIC 0.1uF 25V0%
C108	1-164-156-11	s	CERAMIC 0.1uF 25V0%
C109	1-162-915-11	s	CERAMIC, CHIP 10PF 5PF 50V
C110	1-162-907-11	s	CERAMIC, CHIP 2PF 50V
C111	1-162-920-11	s	CERAMIC, CHIP 27PF 5% 50V
C112	1-162-927-11	s	CERAMIC, CHIP 100PF 5% 50V
C113	1-162-927-11	s	CERAMIC, CHIP 100PF 5% 50V
C114	1-162-915-11	s	CERAMIC, CHIP 10PF 5PF 50V
C115	1-162-925-11	s	CERAMIC, CHIP 68PF 5% 50V
C116	1-162-927-11	s	CERAMIC, CHIP 100PF 5% 50V
C117	1-164-156-11	s	CERAMIC 0.1uF 25V0%
C118	1-164-156-11	s	CERAMIC 0.1uF 25V0%
C119	1-162-905-11	s	CERAMIC 1PF 0.25PF 50V
C120	1-162-927-11	s	CERAMIC, CHIP 100PF 5% 50V
C121	1-164-156-11	s	CERAMIC 0.1uF 25V0%
C122	1-135-216-11	s	TANTALUM, CHIP 10uF 20% 10V
C123	1-164-156-11	s	CERAMIC 0.1uF 25V0%
C125	1-162-927-11	s	CERAMIC, CHIP 100PF 5% 50V
C126	1-135-216-11	s	TANTALUM, CHIP 10uF 20% 10V
C127	1-135-216-11	s	TANTALUM, CHIP 10uF 20% 10V
C128	1-135-216-11	s	TANTALUM, CHIP 10uF 20% 10V
C129	1-164-156-11	s	CERAMIC 0.1uF 25V0%
C130	1-164-156-11	s	CERAMIC 0.1uF 25V0%
C131	1-135-176-21	s	TANTAL 0.68uF 10% 35V
C132	1-164-156-11	s	CERAMIC 0.1uF 25V0%
C133	1-164-156-11	s	CERAMIC 0.1uF 25V0%
C134	1-164-156-11	s	CERAMIC 0.1uF 25V0%
C135	1-164-156-11	s	CERAMIC 0.1uF 25V0%
C136	1-164-156-11	s	CERAMIC 0.1uF 25V0%
C137	1-164-156-11	s	CERAMIC 0.1uF 25V0%
C138	1-164-156-11	s	CERAMIC 0.1uF 25V0%
C139	1-135-177-21	s	TANTALUM, CHIP 1uF 10% 25V
C142	1-135-161-21	s	TANTALUM, CHIP 22uF 10% 10V
C143	1-164-156-11	s	CERAMIC 0.1uF 25V0%
C144	1-164-156-11	s	CERAMIC 0.1uF 25V0%
C145	1-135-216-11	s	TANTALUM, CHIP 10uF 20% 10V
C146	1-164-156-11	s	CERAMIC 0.1uF 25V0%
C147	1-164-156-11	s	CERAMIC 0.1uF 25V0%
C148	1-135-216-11	s	TANTALUM, CHIP 10uF 20% 10V
C149	1-164-156-11	s	CERAMIC 0.1uF 25V0%
C150	1-135-176-21	s	TANTAL 0.68uF 10% 35V
C151	1-162-909-11	s	CERAMIC 4PF 0.25PF 50V
C152	1-135-159-21	s	TANTALUM, CHIP 10uF 10% 20V
C153	1-164-156-11	s	CERAMIC 0.1uF 25V0%
C154	1-162-927-11	s	CERAMIC, CHIP 100PF 5% 50V
C155	1-162-915-11	s	CERAMIC, CHIP 10PF 5PF 50V
C156	1-164-156-11	s	CERAMIC 0.1uF 25V0%
C301	1-164-156-11	s	CERAMIC 0.1uF 25V0%
C302	1-164-156-11	s	CERAMIC 0.1uF 25V0%
C303	1-162-905-11	s	CERAMIC 1PF 0.25PF 50V
C304	1-162-927-11	s	CERAMIC, CHIP 100PF 5% 50V
C305	1-135-091-00	s	TANTALUN, CHIP 1uF 10% 16V
C306	1-164-156-11	s	CERAMIC 0.1uF 25V0%
C307	1-164-156-11	s	CERAMIC 0.1uF 25V0%
C308	1-162-915-11	s	CERAMIC, CHIP 10PF 5PF 50V
C309	1-162-920-11	s	CERAMIC, CHIP 27PF 5% 50V
C310	1-162-907-11	s	CERAMIC, CHIP 2PF 50V
C311	1-162-927-11	s	CERAMIC, CHIP 100PF 5% 50V
C312	1-162-927-11	s	CERAMIC, CHIP 100PF 5% 50V
C313	1-162-915-11	s	CERAMIC, CHIP 10PF 5PF 50V
C314	1-162-925-11	s	CERAMIC, CHIP 68PF 5% 50V
C315	1-162-927-11	s	CERAMIC, CHIP 100PF 5% 50V
C316	1-164-156-11	s	CERAMIC 0.1uF 25V0%
C317	1-164-156-11	s	CERAMIC 0.1uF 25V0%
C318	1-162-905-11	s	CERAMIC 1PF 0.25PF 50V
C319	1-162-927-11	s	CERAMIC, CHIP 100PF 5% 50V
C320	1-164-156-11	s	CERAMIC 0.1uF 25V0%

(PR-155 BOARD)

Ref. No. or Q'ty	Part No.	SP	Description
C321	1-135-216-11	s	TANTALUM, CHIP 10uF 20% 10V
C322	1-164-156-11	s	CERAMIC 0.1uF 25V0%
C324	1-135-216-11	s	TANTALUM, CHIP 10uF 20% 10V
C325	1-162-927-11	s	CERAMIC, CHIP 100PF 5% 50V
C326	1-135-216-11	s	TANTALUM, CHIP 10uF 20% 10V
C327	1-135-216-11	s	TANTALUM, CHIP 10uF 20% 10V
C328	1-164-156-11	s	CERAMIC 0.1uF 25V0%
C329	1-164-156-11	s	CERAMIC 0.1uF 25V0%
C330	1-135-176-21	s	TANTAL 0.68uF 10% 35V
C331	1-164-156-11	s	CERAMIC 0.1uF 25V0%
C332	1-164-156-11	s	CERAMIC 0.1uF 25V0%
C333	1-164-156-11	s	CERAMIC 0.1uF 25V0%
C334	1-164-156-11	s	CERAMIC 0.1uF 25V0%
C335	1-164-156-11	s	CERAMIC 0.1uF 25V0%
C336	1-135-177-21	s	TANTALUM, CHIP 1uF 10% 25V
C339	1-135-161-21	s	TANTALUM, CHIP 22uF 10% 10V
C340	1-164-156-11	s	CERAMIC 0.1uF 25V0%
C341	1-135-216-11	s	TANTALUM, CHIP 10uF 20% 10V
C342	1-164-156-11	s	CERAMIC 0.1uF 25V0%
C343	1-164-156-11	s	CERAMIC 0.1uF 25V0%
C344	1-135-216-11	s	TANTALUM, CHIP 10uF 20% 10V
C345	1-164-156-11	s	CERAMIC 0.1uF 25V0%
C346	1-135-176-21	s	TANTAL 0.68uF 10% 35V
C347	1-162-909-11	s	CERAMIC 4PF 0.25PF 50V
C348	1-135-159-21	s	TANTALUM, CHIP 10uF 10% 20V
C349	1-164-156-11	s	CERAMIC 0.1uF 25V0%
C350	1-162-927-11	s	CERAMIC, CHIP 100PF 5% 50V
C351	1-162-915-11	s	CERAMIC, CHIP 10PF 5PF 50V
C352	1-164-156-11	s	CERAMIC 0.1uF 25V0%
C501	1-164-156-11	s	CERAMIC 0.1uF 25V0%
C502	1-164-156-11	s	CERAMIC 0.1uF 25V0%
C503	1-162-905-11	s	CERAMIC 1PF 0.25PF 50V
C504	1-162-927-11	s	CERAMIC, CHIP 100PF 5% 50V
C505	1-135-091-00	s	TANTALUN, CHIP 1uF 10% 16V
C506	1-164-156-11	s	CERAMIC 0.1uF 25V0%
C507	1-162-915-11	s	CERAMIC, CHIP 10PF 5PF 50V
C508	1-164-156-11	s	CERAMIC 0.1uF 25V0%
C509	1-162-920-11	s	CERAMIC, CHIP 27PF 5% 50V
C510	1-162-907-11	s	CERAMIC, CHIP 2PF 50V
C511	1-162-927-11	s	CERAMIC, CHIP 100PF 5% 50V
C512	1-162-927-11	s	CERAMIC, CHIP 100PF 5% 50V
C513	1-162-915-11	s	CERAMIC, CHIP 10PF 5PF 50V
C514	1-162-925-11	s	CERAMIC, CHIP 68PF 5% 50V
C515	1-162-927-11	s	CERAMIC, CHIP 100PF 5% 50V
C516	1-164-156-11	s	CERAMIC 0.1uF 25V0%
C517	1-164-156-11	s	CERAMIC 0.1uF 25V0%
C518	1-162-905-11	s	CERAMIC 1PF 0.25PF 50V
C519	1-162-927-11	s	CERAMIC, CHIP 100PF 5% 50V
C520	1-164-156-11	s	CERAMIC 0.1uF 25V0%
C521	1-135-216-11	s	TANTALUM, CHIP 10uF 20% 10V
C522	1-164-156-11	s	CERAMIC 0.1uF 25V0%
C524	1-135-216-11	s	TANTALUM, CHIP 10uF 20% 10V
C525	1-162-927-11	s	CERAMIC, CHIP 100PF 5% 50V
C526	1-135-216-11	s	TANTALUM, CHIP 10uF 20% 10V
C527	1-135-216-11	s	TANTALUM, CHIP 10uF 20% 10V
C528	1-164-156-11	s	CERAMIC 0.1uF 25V0%
C529	1-164-156-11	s	CERAMIC 0.1uF 25V0%
C530	1-135-176-21	s	TANTAL 0.68uF 10% 35V
C531	1-164-156-11	s	CERAMIC 0.1uF 25V0%

(PR-155 BOARD)

Ref. No. or Q'ty	Part No.	SP	Description
C532	1-164-156-11	s	CERAMIC 0.1uF 25V0%
C533	1-164-156-11	s	CERAMIC 0.1uF 25V0%
C534	1-164-156-11	s	CERAMIC 0.1uF 25V0%
C535	1-164-156-11	s	CERAMIC 0.1uF 25V0%
C536	1-164-156-11	s	CERAMIC 0.1uF 25V0%
C537	1-164-156-11	s	CERAMIC 0.1uF 25V0%
C538	1-135-177-21	s	TANTALUM, CHIP 1uF 10% 25V
C541	1-135-161-21	s	TANTALUM, CHIP 22uF 10% 10V
C542	1-164-156-11	s	CERAMIC 0.1uF 25V0%
C543	1-164-156-11	s	CERAMIC 0.1uF 25V0%
C544	1-135-216-11	s	TANTALUM, CHIP 10uF 20% 10V
C545	1-164-156-11	s	CERAMIC 0.1uF 25V0%
C546	1-164-156-11	s	CERAMIC 0.1uF 25V0%
C547	1-135-216-11	s	TANTALUM, CHIP 10uF 20% 10V
C548	1-164-156-11	s	CERAMIC 0.1uF 25V0%
C549	1-135-176-21	s	TANTAL 0.68uF 10% 35V
C550	1-162-909-11	s	CERAMIC 4PF 0.25PF 50V
C551	1-135-159-21	s	TANTALUM, CHIP 10uF 10% 20V
C552	1-164-156-11	s	CERAMIC 0.1uF 25V0%
C553	1-162-927-11	s	CERAMIC, CHIP 100PF 5% 50V
C554	1-162-915-11	s	CERAMIC, CHIP 10PF 5PF 50V
C555	1-164-156-11	s	CERAMIC 0.1uF 25V0%
CN1	1-691-847-11	s	CONNECTOR, BOARD TO BOARD 50P
CN2	1-568-361-31	s	CONNECTOR, BOARD TO BOARD 24P
CN3	1-568-355-11	s	CONNECTOR, BOARD TO BOARD 12P
D1	8-719-800-76	s	DIODE 1SS226
D102	8-719-800-76	s	DIODE 1SS226
D103	8-719-820-05	s	DIODE 1SS181
D104	8-719-800-76	s	DIODE 1SS226
D302	8-719-800-76	s	DIODE 1SS226
D303	8-719-820-05	s	DIODE 1SS181
D304	8-719-800-76	s	DIODE 1SS226
D502	8-719-800-76	s	DIODE 1SS226
D503	8-719-820-05	s	DIODE 1SS181
D504	8-719-800-76	s	DIODE 1SS226
IC1	8-759-142-20	s	IC UPC4062G2
IC2	8-759-990-61	s	IC PCF8574T
IC3	8-759-142-20	s	IC UPC4062G2
IC4	8-759-635-27	s	IC M62352GP
IC5	8-759-142-20	s	IC UPC4062G2
IC6	8-759-142-20	s	IC UPC4062G2
IC7	8-759-242-64	s	IC TC4W53F
IC8	8-759-300-71	s	IC MC14053BF
IC9	8-759-234-77	s	IC TC4S66F
IC10	8-759-054-63	s	IC TLC339CNS
IC11	8-759-142-19	s	IC UPC4064G
IC12	8-759-066-68	s	IC REF-03GS
IC101	8-759-054-61	s	IC CLC505AJE
IC102	8-759-054-61	s	IC CLC505AJE
IC103	8-759-142-20	s	IC UPC4062G2
IC105	8-759-142-20	s	IC UPC4062G2
IC106	8-759-030-49	s	IC MC1495M
IC107	8-759-142-20	s	IC UPC4062G2
IC108	8-759-054-61	s	IC CLC505AJE
IC109	8-752-052-77	s	IC CXA1450M
IC110	8-759-234-20	s	IC TC7S08F
IC111	8-759-234-20	s	IC TC7S08F
IC112	8-759-031-84	s	IC SC7S04F

(PR-155 BOARD)

Ref. No. or Q'ty	Part No.	SP	Description
IC113	8-759-054-61	s	IC CLC505AJE
IC114	8-759-054-61	s	IC CLC505AJE
IC301	8-759-054-61	s	IC CLC505AJE
IC302	8-759-054-61	s	IC CLC505AJE
IC303	8-759-142-20	s	IC UPC4062G2
IC305	8-759-142-20	s	IC UPC4062G2
IC306	8-759-030-49	s	IC MC1495M
IC307	8-759-142-20	s	IC UPC4062G2
IC308	8-759-054-61	s	IC CLC505AJE
IC309	8-752-052-77	s	IC CXA1450M
IC313	8-759-054-61	s	IC CLC505AJE
IC314	8-759-054-61	s	IC CLC505AJE
IC501	8-759-054-61	s	IC CLC505AJE
IC502	8-759-054-61	s	IC CLC505AJE
IC503	8-759-142-20	s	IC UPC4062G2
IC505	8-759-142-20	s	IC UPC4062G2
IC506	8-759-030-49	s	IC MC1495M
IC507	8-759-142-20	s	IC UPC4062G2
IC508	8-759-054-61	s	IC CLC505AJE
IC509	8-752-052-77	s	IC CXA1450M
IC513	8-759-054-61	s	IC CLC505AJE
IC514	8-759-054-61	s	IC CLC505AJE
Q1	8-729-143-14	s	TRANSISTOR 2SC4176-B35
Q2	8-729-143-14	s	TRANSISTOR 2SC4176-B35
Q3	8-729-143-14	s	TRANSISTOR 2SC4176-B35
Q4	8-729-143-14	s	TRANSISTOR 2SC4176-B35
Q5	8-729-143-07	s	TRANSISTOR 2SA1610-Y33
Q6	8-729-143-07	s	TRANSISTOR 2SA1610-Y33
Q7	8-729-805-25	s	TRANSISTOR 2SB1121-S
Q8	8-729-143-14	s	TRANSISTOR 2SC4176-B35
Q9	8-729-805-25	s	TRANSISTOR 2SB1121-S
Q10	8-729-807-16	s	TRANSISTOR 2SD1621-R
Q11	8-729-143-14	s	TRANSISTOR 2SC4176-B35
Q12	8-729-143-07	s	TRANSISTOR 2SA1610-Y33
Q101	8-769-401-67	s	TRANSISTOR 3SK163-1
Q102	8-769-401-67	s	TRANSISTOR 3SK163-1
Q111	8-729-425-41	s	TRANSISTOR 2SK1374
Q112	8-729-143-07	s	TRANSISTOR 2SA1610-Y33
Q113	8-729-143-07	s	TRANSISTOR 2SA1610-Y33
Q114	8-729-143-07	s	TRANSISTOR 2SA1610-Y33
Q115	8-729-143-07	s	TRANSISTOR 2SA1610-Y33
Q116	8-729-425-41	s	TRANSISTOR 2SK1374
Q117	8-729-143-14	s	TRANSISTOR 2SC4176-B35
Q301	8-769-401-67	s	TRANSISTOR 3SK163-1
Q302	8-769-401-67	s	TRANSISTOR 3SK163-1
Q306	8-729-425-41	s	TRANSISTOR 2SK1374
Q307	8-729-143-07	s	TRANSISTOR 2SA1610-Y33
Q308	8-729-143-07	s	TRANSISTOR 2SA1610-Y33
Q309	8-729-143-07	s	TRANSISTOR 2SA1610-Y33
Q310	8-729-143-07	s	TRANSISTOR 2SA1610-Y33
Q311	8-729-425-41	s	TRANSISTOR 2SK1374
Q312	8-729-143-14	s	TRANSISTOR 2SC4176-B35
Q313	8-729-920-99	s	TRANSISTOR DTA114EU
Q314	8-729-907-00	s	TRANSISTOR DTC114EU
Q501	8-769-401-67	s	TRANSISTOR 3SK163-1
Q502	8-769-401-67	s	TRANSISTOR 3SK163-1
Q506	8-729-425-41	s	TRANSISTOR 2SK1374
Q507	8-729-143-07	s	TRANSISTOR 2SA1610-Y33

(PR-155 BOARD)

Ref. No. or Q'ty	Part No.	SP	Description
Q508	8-729-143-07	s	TRANSISTOR 2SA1610-Y33
Q509	8-729-143-07	s	TRANSISTOR 2SA1610-Y33
Q510	8-729-143-07	s	TRANSISTOR 2SA1610-Y33
Q511	8-729-425-41	s	TRANSISTOR 2SK1374
Q512	8-729-143-14	s	TRANSISTOR 2SC4176-B35
R1	1-218-271-11	s	METAL 2K 0.50% 1/16W
R2	1-218-271-11	s	METAL 2K 0.50% 1/16W
R3	1-216-797-11	s	METAL, CHIP 10 5% 1/16W
R4	1-216-797-11	s	METAL, CHIP 10 5% 1/16W
R5	1-218-883-11	s	METAL 33K 0.50% 1/16W
R6	1-218-883-11	s	METAL 33K 0.50% 1/16W
R7	1-216-797-11	s	METAL, CHIP 10 5% 1/16W
R8	1-216-797-11	s	METAL, CHIP 10 5% 1/16W
R9	1-216-797-11	s	METAL, CHIP 10 5% 1/16W
R10	1-218-883-11	s	METAL 33K 0.50% 1/16W
R11	1-218-716-11	s	METAL 10K 0.50% 1/16W
R12	1-216-804-11	s	METAL 39K 0.50% 1/16W
R13	1-218-664-11	s	METAL 68 0.50% 1/16W
R14	1-218-675-11	s	METAL 200 0.50% 1/16W
R15	1-218-675-11	s	METAL 200 0.50% 1/16W
R16	1-216-821-11	s	METAL, CHIP 1K 5% 1/16W
R17	1-216-821-11	s	METAL, CHIP 1K 5% 1/16W
R18	1-218-664-11	s	METAL 68 0.50% 1/16W
R19	1-218-344-11	s	METAL 7.5K 0.50% 1/16W
R20	1-218-288-11	s	METAL, CHIP 300 5% 1/16W
R21	1-216-865-11	s	METAL, CHIP 3K 1/16W
R22	1-218-664-11	s	METAL 68 0.50% 1/16W
R23	1-218-675-11	s	METAL 200 0.50% 1/16W
R24	1-218-675-11	s	METAL 200 0.50% 1/16W
R25	1-218-675-11	s	METAL 200 0.50% 1/16W
R26	1-218-675-11	s	METAL 200 0.50% 1/16W
R27	1-216-821-11	s	METAL, CHIP 1K 5% 1/16W
R28	1-216-821-11	s	METAL, CHIP 1K 5% 1/16W
R29	1-216-821-11	s	METAL, CHIP 1K 5% 1/16W
R30	1-216-821-11	s	METAL, CHIP 1K 5% 1/16W
R31	1-218-272-11	s	METAL 5.1K 0.50% 1/16W
R32	1-218-272-11	s	METAL 5.1K 0.50% 1/16W
R33	1-218-272-11	s	METAL 5.1K 0.50% 1/16W
R34	1-218-272-11	s	METAL 5.1K 0.50% 1/16W
R35	1-218-271-11	s	METAL 2K 0.50% 1/16W
R36	1-218-716-11	s	METAL 10K 0.50% 1/16W
R37	1-218-345-11	s	METAL 9.1K 0.50% 1/16W
R38	1-216-821-11	s	METAL, CHIP 1K 5% 1/16W
R39	1-218-716-11	s	METAL 10K 0.50% 1/16W
R40	1-218-716-11	s	METAL 10K 0.50% 1/16W
R41	1-216-864-11	s	METAL, CHIP 0-OHM
R42	1-216-854-11	s	METAL, CHIP 560K 5% 1/16W
R43	1-216-854-11	s	METAL, CHIP 560K 5% 1/16W
R44	1-218-716-11	s	METAL 10K 0.50% 1/16W
R45	1-218-716-11	s	METAL 10K 0.50% 1/16W
R46	1-218-708-11	s	METAL 4.7K 0.50% 1/16W
R47	1-216-865-11	s	METAL, CHIP 3K 1/16W
R48	1-218-271-11	s	METAL 2K 0.50% 1/16W
R49	1-218-716-11	s	METAL 10K 0.50% 1/16W
R50	1-218-716-11	s	METAL 10K 0.50% 1/16W
R51	1-218-716-11	s	METAL 10K 0.50% 1/16W
R52	1-218-883-11	s	METAL 33K 0.50% 1/16W
R53	1-218-677-11	s	METAL 240 0.50% 1/16W
R54	1-218-708-11	s	METAL 4.7K 0.50% 1/16W

(PR-155 BOARD)

Ref. No. or Q'ty	Part No.	SP	Description
R55	1-218-345-11	s	METAL 9.1K 0.50% 1/16W
R56	1-218-701-11	s	METAL 2.4K 0.50% 1/16W
R57	1-218-740-11	s	METAL 100K 0.50% 1/16W
R58	1-216-821-11	s	METAL, CHIP 1K 5% 1/16W
R59	1-218-706-11	s	METAL 3.9K 0.50% 1/16W
R60	1-216-836-11	s	METAL, CHIP 18K 5% 1/16W
R61	1-218-344-11	s	METAL 7.5K 0.50% 1/16W
R62	1-218-723-11	s	METAL 20K 0.50% 1/16W
R63	1-218-706-11	s	METAL 3.9K 0.50% 1/16W
R64	1-216-836-11	s	METAL, CHIP 18K 5% 1/16W
R65	1-218-344-11	s	METAL 7.5K 0.50% 1/16W
R66	1-218-723-11	s	METAL 20K 0.50% 1/16W
R67	1-218-706-11	s	METAL 3.9K 0.50% 1/16W
R68	1-218-723-11	s	METAL 20K 0.50% 1/16W
R69	1-218-723-11	s	METAL 20K 0.50% 1/16W
R70	1-218-716-11	s	METAL 10K 0.50% 1/16W
R71	1-218-723-11	s	METAL 20K 0.50% 1/16W
R72	1-218-883-11	s	METAL 33K 0.50% 1/16W
R73	1-218-272-11	s	METAL 5.1K 0.50% 1/16W
R74	1-218-272-11	s	METAL 5.1K 0.50% 1/16W
R75	1-216-821-11	s	METAL, CHIP 1K 5% 1/16W
R76	1-218-675-11	s	METAL 200 0.50% 1/16W
R101	1-218-883-11	s	METAL 33K 0.50% 1/16W
R102	1-218-675-11	s	METAL 200 0.50% 1/16W
R103	1-218-664-11	s	METAL 68 0.50% 1/16W
R104	1-218-285-11	s	METAL, CHIP 75 5% 1/16W
R105	1-216-821-11	s	METAL, CHIP 1K 5% 1/16W
R106	1-218-668-11	s	METAL 100 0.50% 1/16W
R107	1-216-821-11	s	METAL, CHIP 1K 5% 1/16W
R108	1-216-821-11	s	METAL, CHIP 1K 5% 1/16W
R109	1-218-745-11	s	METAL 160K 0.50% 1/16W
R110	1-216-821-11	s	METAL, CHIP 1K 5% 1/16W
R111	1-216-821-11	s	METAL, CHIP 1K 5% 1/16W
R112	1-218-748-11	s	METAL 220K 0.50% 1/16W
R113	1-218-740-11	s	METAL 100K 0.50% 1/16W
R114	1-218-286-11	s	METAL 91 0.50% 1/16W
R115	1-218-708-11	s	METAL 4.7K 0.50% 1/16W
R116	1-218-745-11	s	METAL 160K 0.50% 1/16W
R117	1-218-457-11	s	METAL 910 0.50% 1/16W
R118	1-218-704-11	s	METAL 3.3K 0.50% 1/16W
R119	1-218-272-11	s	METAL 5.1K 0.50% 1/16W
R120	1-218-716-11	s	METAL 10K 0.50% 1/16W
R121	1-218-740-11	s	METAL 100K 0.50% 1/16W
R122	1-218-700-11	s	METAL 2.2K 0.50% 1/16W
R123	1-216-822-11	s	METAL, CHIP 1.2K 5% 1/16W
R124	1-218-883-11	s	METAL 33K 0.50% 1/16W
R125	1-218-272-11	s	METAL 5.1K 0.50% 1/16W
R126	1-218-716-11	s	METAL 10K 0.50% 1/16W
R127	1-218-740-11	s	METAL 100K 0.50% 1/16W
R128	1-216-821-11	s	METAL, CHIP 1K 5% 1/16W
R129	1-216-821-11	s	METAL, CHIP 1K 5% 1/16W
R130	1-218-745-11	s	METAL 160K 0.50% 1/16W
R131	1-218-457-11	s	METAL 910 0.50% 1/16W
R132	1-218-457-11	s	METAL 910 0.50% 1/16W
R133	1-218-457-11	s	METAL 910 0.50% 1/16W
R134	1-216-826-11	s	METAL, CHIP 2.7K 5% 1/16W
R135	1-218-695-11	s	METAL 1.3K 0.50% 1/16W
R136	1-218-295-11	s	METAL 5.6K 0.50% 1/16W
R137	1-218-745-11	s	METAL 160K 0.50% 1/16W

(PR-155 BOARD)

Ref. No. or Q'ty	Part No.	SP	Description
R138	1-218-664-11	s	METAL 68 0.50% 1/16W
R139	1-218-272-11	s	METAL 5.1K 0.50% 1/16W
R140	1-218-272-11	s	METAL 5.1K 0.50% 1/16W
R141	1-218-668-11	s	METAL 100 0.50% 1/16W
R142	1-218-272-11	s	METAL 5.1K 0.50% 1/16W
R143	1-218-272-11	s	METAL 5.1K 0.50% 1/16W
R144	1-218-668-11	s	METAL 100 0.50% 1/16W
R145	1-218-700-11	s	METAL 2.2K 0.50% 1/16W
R146	1-218-668-11	s	METAL 100 0.50% 1/16W
R147	1-218-700-11	s	METAL 2.2K 0.50% 1/16W
R148	1-218-668-11	s	METAL 100 0.50% 1/16W
R149	1-216-823-11	s	METAL, CHIP 1.5K 5% 1/16W
R150	1-218-705-11	s	METAL 3.6K 0.50% 1/16W
R151	1-218-720-11	s	METAL 15K 0.50% 1/16W
R152	1-218-723-11	s	METAL 20K 0.50% 1/16W
R153	1-218-750-11	s	METAL 270K 0.50% 1/16W
R154	1-216-854-11	s	METAL, CHIP 560K 5% 1/16W
R155	1-216-795-11	s	METAL 6.8K 0.50% 1/16W
R156	1-216-855-11	s	METAL 680K 5% 1/16W
R157	1-216-994-11	s	METAL, CHIP 13K 5% 1/16W
R158	1-218-748-11	s	METAL 220K 0.50% 1/16W
R159	1-216-853-11	s	METAL, CHIP 470K 5% 1/16W
R160	1-216-854-11	s	METAL, CHIP 560K 5% 1/16W
R161	1-218-716-11	s	METAL 10K 0.50% 1/16W
R162	1-216-821-11	s	METAL, CHIP 1K 5% 1/16W
R163	1-218-664-11	s	METAL 68 0.50% 1/16W
R164	1-218-668-11	s	METAL 100 0.50% 1/16W
R165	1-218-668-11	s	METAL 100 0.50% 1/16W
R166	1-218-295-11	s	METAL 5.6K 0.50% 1/16W
R167	1-218-484-11	s	METAL 750 0.50% 1/16W
R168	1-218-344-11	s	METAL 7.5K 0.50% 1/16W
R169	1-218-344-11	s	METAL 7.5K 0.50% 1/16W
R170	1-216-823-11	s	METAL, CHIP 1.5K 5% 1/16W
R171	1-218-695-11	s	METAL 1.3K 0.50% 1/16W
R172	1-218-695-11	s	METAL 1.3K 0.50% 1/16W
R173	1-216-821-11	s	METAL, CHIP 1K 5% 1/16W
R174	1-218-716-11	s	METAL 10K 0.50% 1/16W
R175	1-218-883-11	s	METAL 33K 0.50% 1/16W
R176	1-218-748-11	s	METAL 220K 0.50% 1/16W
R177	1-216-854-11	s	METAL, CHIP 560K 5% 1/16W
R178	1-216-854-11	s	METAL, CHIP 560K 5% 1/16W
R179	1-218-272-11	s	METAL 5.1K 0.50% 1/16W
R180	1-218-272-11	s	METAL 5.1K 0.50% 1/16W
R181	1-218-344-11	s	METAL 7.5K 0.50% 1/16W
R182	1-218-704-11	s	METAL 3.3K 0.50% 1/16W
R183	1-216-865-11	s	METAL, CHIP 3K 1/16W
R184	1-216-821-11	s	METAL, CHIP 1K 5% 1/16W
R185	1-216-817-11	s	METAL, CHIP 470 5% 1/16W
R186	1-218-668-11	s	METAL 100 0.50% 1/16W
R187	1-216-823-11	s	METAL, CHIP 1.5K 5% 1/16W
R188	1-218-705-11	s	METAL 3.6K 0.50% 1/16W
R189	1-218-668-11	s	METAL 100 0.50% 1/16W
R190	1-218-695-11	s	METAL 1.3K 0.50% 1/16W
R191	1-218-745-11	s	METAL 160K 0.50% 1/16W
R192	1-218-271-11	s	METAL 2K 0.50% 1/16W
R193	1-218-664-11	s	METAL 68 0.50% 1/16W
R194	1-218-285-11	s	METAL, CHIP 75 5% 1/16W
R195	1-216-821-11	s	METAL, CHIP 1K 5% 1/16W
R196	1-216-821-11	s	METAL, CHIP 1K 5% 1/16W

(PR-155 BOARD)

Ref. No. or Q'ty	Part No.	SP	Description
R197	1-218-708-11	s	METAL 4.7K 0.50% 1/16W
R301	1-218-664-11	s	METAL 68 0.50% 1/16W
R302	1-218-285-11	s	METAL, CHIP 75 5% 1/16W
R303	1-216-821-11	s	METAL, CHIP 1K 5% 1/16W
R304	1-218-668-11	s	METAL 100 0.50% 1/16W
R305	1-216-821-11	s	METAL, CHIP 1K 5% 1/16W
R306	1-216-821-11	s	METAL, CHIP 1K 5% 1/16W
R307	1-218-745-11	s	METAL 160K 0.50% 1/16W
R308	1-216-821-11	s	METAL, CHIP 1K 5% 1/16W
R309	1-216-821-11	s	METAL, CHIP 1K 5% 1/16W
R310	1-218-748-11	s	METAL 220K 0.50% 1/16W
R311	1-218-740-11	s	METAL 100K 0.50% 1/16W
R312	1-218-286-11	s	METAL 91 0.50% 1/16W
R313	1-218-708-11	s	METAL 4.7K 0.50% 1/16W
R314	1-218-745-11	s	METAL 160K 0.50% 1/16W
R315	1-218-704-11	s	METAL 3.3K 0.50% 1/16W
R316	1-218-457-11	s	METAL 910 0.50% 1/16W
R317	1-218-272-11	s	METAL 5.1K 0.50% 1/16W
R318	1-218-716-11	s	METAL 10K 0.50% 1/16W
R319	1-218-740-11	s	METAL 100K 0.50% 1/16W
R320	1-218-700-11	s	METAL 2.2K 0.50% 1/16W
R321	1-216-822-11	s	METAL, CHIP 1.2K 5% 1/16W
R322	1-218-272-11	s	METAL 5.1K 0.50% 1/16W
R323	1-218-716-11	s	METAL 10K 0.50% 1/16W
R324	1-218-740-11	s	METAL 100K 0.50% 1/16W
R325	1-216-821-11	s	METAL, CHIP 1K 5% 1/16W
R326	1-216-821-11	s	METAL, CHIP 1K 5% 1/16W
R327	1-218-745-11	s	METAL 160K 0.50% 1/16W
R328	1-218-457-11	s	METAL 910 0.50% 1/16W
R329	1-218-457-11	s	METAL 910 0.50% 1/16W
R330	1-218-457-11	s	METAL 910 0.50% 1/16W
R331	1-216-826-11	s	METAL, CHIP 2.7K 5% 1/16W
R332	1-218-695-11	s	METAL 1.3K 0.50% 1/16W
R333	1-218-295-11	s	METAL 5.6K 0.50% 1/16W
R334	1-218-745-11	s	METAL 160K 0.50% 1/16W
R335	1-218-664-11	s	METAL 68 0.50% 1/16W
R336	1-218-272-11	s	METAL 5.1K 0.50% 1/16W
R337	1-218-272-11	s	METAL 5.1K 0.50% 1/16W
R338	1-218-668-11	s	METAL 100 0.50% 1/16W
R339	1-218-272-11	s	METAL 5.1K 0.50% 1/16W
R340	1-218-272-11	s	METAL 5.1K 0.50% 1/16W
R341	1-218-668-11	s	METAL 100 0.50% 1/16W
R342	1-218-700-11	s	METAL 2.2K 0.50% 1/16W
R343	1-218-668-11	s	METAL 100 0.50% 1/16W
R344	1-218-700-11	s	METAL 2.2K 0.50% 1/16W
R345	1-218-668-11	s	METAL 100 0.50% 1/16W
R346	1-218-705-11	s	METAL 3.6K 0.50% 1/16W
R347	1-216-823-11	s	METAL, CHIP 1.5K 5% 1/16W
R348	1-218-720-11	s	METAL 15K 0.50% 1/16W
R349	1-218-723-11	s	METAL 20K 0.50% 1/16W
R350	1-216-795-11	s	METAL 6.8K 0.50% 1/16W
R352	1-216-994-11	s	METAL, CHIP 13K 5% 1/16W
R353	1-218-716-11	s	METAL 10K 0.50% 1/16W
R354	1-216-821-11	s	METAL, CHIP 1K 5% 1/16W
R355	1-218-664-11	s	METAL 68 0.50% 1/16W
R356	1-218-668-11	s	METAL 100 0.50% 1/16W
R357	1-218-668-11	s	METAL 100 0.50% 1/16W
R358	1-218-295-11	s	METAL 5.6K 0.50% 1/16W
R359	1-218-484-11	s	METAL 750 0.50% 1/16W

(PR-155 BOARD)

Ref. No. or Q'ty	Part No.	SP	Description
R360	1-218-344-11	s	METAL 7.5K 0.50% 1/16W
R361	1-218-344-11	s	METAL 7.5K 0.50% 1/16W
R362	1-216-823-11	s	METAL, CHIP 1.5K 5% 1/16W
R363	1-218-695-11	s	METAL 1.3K 0.50% 1/16W
R364	1-218-695-11	s	METAL 1.3K 0.50% 1/16W
R365	1-216-821-11	s	METAL, CHIP 1K 5% 1/16W
R366	1-218-716-11	s	METAL 10K 0.50% 1/16W
R367	1-218-883-11	s	METAL 33K 0.50% 1/16W
R368	1-218-272-11	s	METAL 5.1K 0.50% 1/16W
R369	1-218-272-11	s	METAL 5.1K 0.50% 1/16W
R370	1-218-344-11	s	METAL 7.5K 0.50% 1/16W
R371	1-218-704-11	s	METAL 3.3K 0.50% 1/16W
R372	1-216-865-11	s	METAL, CHIP 3K 1/16W
R373	1-216-821-11	s	METAL, CHIP 1K 5% 1/16W
R374	1-216-817-11	s	METAL, CHIP 470 5% 1/16W
R375	1-218-668-11	s	METAL 100 0.50% 1/16W
R376	1-216-823-11	s	METAL, CHIP 1.5K 5% 1/16W
R377	1-218-705-11	s	METAL 3.6K 0.50% 1/16W
R378	1-218-668-11	s	METAL 100 0.50% 1/16W
R379	1-218-695-11	s	METAL 1.3K 0.50% 1/16W
R380	1-218-745-11	s	METAL 160K 0.50% 1/16W
R381	1-218-271-11	s	METAL 2K 0.50% 1/16W
R382	1-218-664-11	s	METAL 68 0.50% 1/16W
R383	1-218-285-11	s	METAL, CHIP 75 5% 1/16W
R384	1-216-821-11	s	METAL, CHIP 1K 5% 1/16W
R385	1-216-821-11	s	METAL, CHIP 1K 5% 1/16W
R386	1-218-708-11	s	METAL 4.7K 0.50% 1/16W
R501	1-218-664-11	s	METAL 68 0.50% 1/16W
R502	1-218-285-11	s	METAL, CHIP 75 5% 1/16W
R503	1-216-821-11	s	METAL, CHIP 1K 5% 1/16W
R504	1-218-668-11	s	METAL 100 0.50% 1/16W
R505	1-216-821-11	s	METAL, CHIP 1K 5% 1/16W
R506	1-216-821-11	s	METAL, CHIP 1K 5% 1/16W
R507	1-218-745-11	s	METAL 160K 0.50% 1/16W
R508	1-216-821-11	s	METAL, CHIP 1K 5% 1/16W
R509	1-216-821-11	s	METAL, CHIP 1K 5% 1/16W
R510	1-218-748-11	s	METAL 220K 0.50% 1/16W
R511	1-218-740-11	s	METAL 100K 0.50% 1/16W
R512	1-218-286-11	s	METAL 91 0.50% 1/16W
R513	1-218-708-11	s	METAL 4.7K 0.50% 1/16W
R514	1-218-704-11	s	METAL 3.3K 0.50% 1/16W
R515	1-218-745-11	s	METAL 160K 0.50% 1/16W
R516	1-218-457-11	s	METAL 910 0.50% 1/16W
R517	1-218-272-11	s	METAL 5.1K 0.50% 1/16W
R518	1-218-716-11	s	METAL 10K 0.50% 1/16W
R519	1-218-740-11	s	METAL 100K 0.50% 1/16W
R520	1-218-700-11	s	METAL 2.2K 0.50% 1/16W
R521	1-216-822-11	s	METAL, CHIP 1.2K 5% 1/16W
R522	1-218-272-11	s	METAL 5.1K 0.50% 1/16W
R523	1-218-716-11	s	METAL 10K 0.50% 1/16W
R524	1-218-740-11	s	METAL 100K 0.50% 1/16W
R525	1-216-821-11	s	METAL, CHIP 1K 5% 1/16W
R526	1-216-821-11	s	METAL, CHIP 1K 5% 1/16W
R527	1-218-745-11	s	METAL 160K 0.50% 1/16W
R528	1-218-457-11	s	METAL 910 0.50% 1/16W
R529	1-218-457-11	s	METAL 910 0.50% 1/16W
R530	1-218-457-11	s	METAL 910 0.50% 1/16W
R531	1-216-826-11	s	METAL, CHIP 2.7K 5% 1/16W
R532	1-218-695-11	s	METAL 1.3K 0.50% 1/16W

Ref. No. or Q'ty	Part No.	SP	Description
R533	1-218-295-11	s	METAL 5.6K 0.50% 1/16W
R534	1-218-745-11	s	METAL 160K 0.50% 1/16W
R535	1-218-664-11	s	METAL 68 0.50% 1/16W
R536	1-218-272-11	s	METAL 5.1K 0.50% 1/16W
R537	1-218-272-11	s	METAL 5.1K 0.50% 1/16W
R538	1-218-668-11	s	METAL 100 0.50% 1/16W
R539	1-218-272-11	s	METAL 5.1K 0.50% 1/16W
R540	1-218-272-11	s	METAL 5.1K 0.50% 1/16W
R541	1-218-668-11	s	METAL 100 0.50% 1/16W
R542	1-218-700-11	s	METAL 2.2K 0.50% 1/16W
R543	1-218-668-11	s	METAL 100 0.50% 1/16W
R544	1-218-700-11	s	METAL 2.2K 0.50% 1/16W
R545	1-218-668-11	s	METAL 100 0.50% 1/16W
R546	1-218-705-11	s	METAL 3.6K 0.50% 1/16W
R547	1-216-823-11	s	METAL, CHIP 1.5K 5% 1/16W
R548	1-218-720-11	s	METAL 15K 0.50% 1/16W
R549	1-218-723-11	s	METAL 20K 0.50% 1/16W
R550	1-218-750-11	s	METAL 270K 0.50% 1/16W
R551	1-216-854-11	s	METAL, CHIP 560K 5% 1/16W
R552	1-216-795-11	s	METAL 6.8K 0.50% 1/16W
R553	1-216-855-11	s	METAL 680K 5% 1/16W
R554	1-216-994-11	s	METAL, CHIP 13K 5% 1/16W
R555	1-218-748-11	s	METAL 220K 0.50% 1/16W
R556	1-216-853-11	s	METAL, CHIP 470K 5% 1/16W
R557	1-216-854-11	s	METAL, CHIP 560K 5% 1/16W
R558	1-218-716-11	s	METAL 10K 0.50% 1/16W
R559	1-216-821-11	s	METAL, CHIP 1K 5% 1/16W
R560	1-218-664-11	s	METAL 68 0.50% 1/16W
R561	1-218-668-11	s	METAL 100 0.50% 1/16W
R562	1-218-668-11	s	METAL 100 0.50% 1/16W
R563	1-218-295-11	s	METAL 5.6K 0.50% 1/16W
R564	1-218-484-11	s	METAL 750 0.50% 1/16W
R565	1-218-344-11	s	METAL 7.5K 0.50% 1/16W
R566	1-218-344-11	s	METAL 7.5K 0.50% 1/16W
R567	1-216-823-11	s	METAL, CHIP 1.5K 5% 1/16W
R568	1-218-695-11	s	METAL 1.3K 0.50% 1/16W
R569	1-218-695-11	s	METAL 1.3K 0.50% 1/16W
R570	1-216-821-11	s	METAL, CHIP 1K 5% 1/16W
R571	1-218-716-11	s	METAL 10K 0.50% 1/16W
R572	1-218-883-11	s	METAL 33K 0.50% 1/16W
R573	1-218-748-11	s	METAL 220K 0.50% 1/16W
R574	1-216-854-11	s	METAL, CHIP 560K 5% 1/16W
R575	1-216-854-11	s	METAL, CHIP 560K 5% 1/16W
R576	1-218-272-11	s	METAL 5.1K 0.50% 1/16W
R577	1-218-272-11	s	METAL 5.1K 0.50% 1/16W
R578	1-218-344-11	s	METAL 7.5K 0.50% 1/16W
R579	1-218-704-11	s	METAL 3.3K 0.50% 1/16W
R580	1-216-865-11	s	METAL, CHIP 3K 1/16W
R581	1-216-821-11	s	METAL, CHIP 1K 5% 1/16W
R582	1-216-817-11	s	METAL, CHIP 470 5% 1/16W
R583	1-218-668-11	s	METAL 100 0.50% 1/16W
R584	1-216-823-11	s	METAL, CHIP 1.5K 5% 1/16W
R585	1-218-705-11	s	METAL 3.6K 0.50% 1/16W
R586	1-218-668-11	s	METAL 100 0.50% 1/16W
R587	1-218-695-11	s	METAL 1.3K 0.50% 1/16W
R588	1-218-745-11	s	METAL 160K 0.50% 1/16W
R589	1-218-271-11	s	METAL 2K 0.50% 1/16W
R590	1-218-664-11	s	METAL 68 0.50% 1/16W
R591	1-218-285-11	s	METAL, CHIP 75 5% 1/16W
R592	1-216-821-11	s	METAL, CHIP 1K 5% 1/16W
R593	1-216-821-11	s	METAL, CHIP 1K 5% 1/16W
R594	1-218-708-11	s	METAL 4.7K 0.50% 1/16W
RV1	1-228-476-00	s	RES, ADJ, METAL 50K
RV2	1-237-033-11	s	RES, ADJ, METAL 1K
RV3	1-228-476-00	s	RES, ADJ, METAL 50K
RV4	1-228-473-00	s	RES, ADJ, METAL 5K
RV5	1-228-476-00	s	RES, ADJ, METAL 50K
RV100	1-237-031-11	s	RES, ADJ, METAL 200
RV101	1-237-038-11	s	RES, ADJ, METAL 50K
RV102	1-237-038-11	s	RES, ADJ, METAL 50K
RV103	1-228-476-00	s	RES, ADJ, METAL 50K
RV104	1-237-031-11	s	RES, ADJ, METAL 200
RV300	1-237-031-11	s	RES, ADJ, METAL 200
RV301	1-237-031-11	s	RES, ADJ, METAL 200
RV500	1-237-031-11	s	RES, ADJ, METAL 200
RV501	1-237-038-11	s	RES, ADJ, METAL 50K
RV502	1-237-038-11	s	RES, ADJ, METAL 50K
RV503	1-228-476-00	s	RES, ADJ, METAL 50K
RV504	1-237-031-11	s	RES, ADJ, METAL 200

PR-168 BOARD

Ref. No. or Q'ty	Part No.	SP	Description
1pc	A-8271-408-A	o	MOUNTED CIRCUIT BOARD, PR-168
2pcs	7-621-772-18	s	SCREW +B 2X4
2pcs	7-627-553-68	s	SCREW, PRECISION +P 2X6
C1	1-164-156-11	s	CERAMIC 0.1uF 25V0%
C2	1-135-157-21	s	TANTALUM, CHIP 10uF 10% 6.3V
C3	1-164-156-11	s	CERAMIC 0.1uF 25V0%
C4	1-164-156-11	s	CERAMIC 0.1uF 25V0%
C5	1-164-156-11	s	CERAMIC 0.1uF 25V0%
C6	1-164-156-11	s	CERAMIC 0.1uF 25V0%
C7	1-126-396-11	s	ELECT, CHIP 47uF 20% 16V
C8	1-164-156-11	s	CERAMIC 0.1uF 25V0%
C9	1-162-927-11	s	CERAMIC, CHIP 100PF 5% 50V
C10	1-135-155-21	s	TANTALUM, CHIP 4.7uF 10% 16V
C11	1-135-155-21	s	TANTALUM, CHIP 4.7uF 10% 16V
C12	1-135-177-21	s	TANTALUM, CHIP 1uF 10% 25V
C13	1-164-156-11	s	CERAMIC 0.1uF 25V0%
C14	1-164-156-11	s	CERAMIC 0.1uF 25V0%
C15	1-164-156-11	s	CERAMIC 0.1uF 25V0%
C16	1-164-156-11	s	CERAMIC 0.1uF 25V0%
C17	1-162-970-11	s	CERAMIC, CHIP 0.01uF 10% 25V
C18	1-126-392-11	s	ELECT, CHIP 100uF 20% 6.3V
C19	1-126-392-11	s	ELECT, CHIP 100uF 20% 6.3V
C20	1-162-970-11	s	CERAMIC, CHIP 0.01uF 10% 25V
C21	1-162-970-11	s	CERAMIC, CHIP 0.01uF 10% 25V
C22	1-162-970-11	s	CERAMIC, CHIP 0.01uF 10% 25V
C23	1-162-927-11	s	CERAMIC, CHIP 100PF 5% 50V
C24	1-162-927-11	s	CERAMIC, CHIP 100PF 5% 50V
C25	1-164-156-11	s	CERAMIC 0.1uF 25V0%
C26	1-162-915-11	s	CERAMIC, CHIP 10PF 5PF 50V
C27	1-135-177-21	s	TANTALUM, CHIP 1uF 10% 25V
C28	1-135-177-21	s	TANTALUM, CHIP 1uF 10% 25V
C48	1-135-162-21	s	TANTALUM, CHIP 33uF 10% 6.3V
C100	1-135-216-11	s	TANTALUM, CHIP 10uF 20% 10V
C101	1-135-155-21	s	TANTALUM, CHIP 4.7uF 10% 16V
C102	1-164-156-11	s	CERAMIC 0.1uF 25V0%
C103	1-162-907-11	s	CERAMIC, CHIP 2PF 50V
C104	1-164-156-11	s	CERAMIC 0.1uF 25V0%
C105	1-162-927-11	s	CERAMIC, CHIP 100PF 5% 50V
C106	1-126-397-11	s	ELECT, CHIP 33uF 20% 25V
C107	1-135-216-11	s	TANTALUM, CHIP 10uF 20% 10V
C108	1-135-216-11	s	TANTALUM, CHIP 10uF 20% 10V
C109	1-164-156-11	s	CERAMIC 0.1uF 25V0%
C110	1-164-156-11	s	CERAMIC 0.1uF 25V0%
C111	1-164-156-11	s	CERAMIC 0.1uF 25V0%
C112	1-164-156-11	s	CERAMIC 0.1uF 25V0%
C113	1-164-156-11	s	CERAMIC 0.1uF 25V0%
C115	1-164-156-11	s	CERAMIC 0.1uF 25V0%
C116	1-164-156-11	s	CERAMIC 0.1uF 25V0%
C117	1-164-156-11	s	CERAMIC 0.1uF 25V0%
C118	1-164-156-11	s	CERAMIC 0.1uF 25V0%
C119	1-164-156-11	s	CERAMIC 0.1uF 25V0%
C120	1-135-177-21	s	TANTALUM, CHIP 1uF 10% 25V
C123	1-135-161-21	s	TANTALUM, CHIP 22uF 10% 10V
C124	1-164-156-11	s	CERAMIC 0.1uF 25V0%
C125	1-164-156-11	s	CERAMIC 0.1uF 25V0%
C126	1-135-076-21	s	TANTALUM, CHIP 1uF 10% 35V
C127	1-135-076-21	s	TANTALUM, CHIP 1uF 10% 35V
C128	1-164-156-11	s	CERAMIC 0.1uF 25V0%
C129	1-164-156-11	s	CERAMIC 0.1uF 25V0%
C130	1-164-156-11	s	CERAMIC 0.1uF 25V0%
C131	1-135-155-21	s	TANTALUM, CHIP 4.7uF 10% 16V
C132	1-162-908-11	s	CERAMIC 3PF 0.25PF 50V
C133	1-162-927-11	s	CERAMIC, CHIP 100PF 5% 50V
C134	1-135-216-11	s	TANTALUM, CHIP 10uF 20% 10V
C135	1-135-216-11	s	TANTALUM, CHIP 10uF 20% 10V
C136	1-164-156-11	s	CERAMIC 0.1uF 25V0%
C137	1-135-177-21	s	TANTALUM, CHIP 1uF 10% 25V
C138	1-164-156-11	s	CERAMIC 0.1uF 25V0%
C139	1-162-915-11	s	CERAMIC, CHIP 10PF 5PF 50V
C140	1-164-156-11	s	CERAMIC 0.1uF 25V0%
C300	1-135-216-11	s	TANTALUM, CHIP 10uF 20% 10V
C301	1-135-155-21	s	TANTALUM, CHIP 4.7uF 10% 16V
C302	1-162-915-11	s	CERAMIC, CHIP 10PF 5PF 50V
C303	1-164-156-11	s	CERAMIC 0.1uF 25V
C304	1-162-907-11	s	CERAMIC, CHIP 2PF 50V
C305	1-164-156-11	s	CERAMIC 0.1uF 25V
C306	1-162-927-11	s	CERAMIC, CHIP 100PF 5% 50V
C307	1-126-397-11	s	ELECT, CHIP 33uF 20% 25V
C308	1-135-216-11	s	TANTALUM, CHIP 10uF 20% 10V
C309	1-135-216-11	s	TANTALUM, CHIP 10uF 20% 10V
C310	1-164-156-11	s	CERAMIC 0.1uF 25V
C311	1-164-156-11	s	CERAMIC 0.1uF 25V
C312	1-164-156-11	s	CERAMIC 0.1uF 25V
C313	1-164-156-11	s	CERAMIC 0.1uF 25V
C314	1-135-155-21	s	TANTALUM, CHIP 4.7uF 10% 16V
C315	1-164-156-11	s	CERAMIC 0.1uF 25V
C316	1-164-156-11	s	CERAMIC 0.1uF 25V
C317	1-135-155-21	s	TANTALUM, CHIP 4.7uF 10% 16V
C318	1-135-149-21	s	TANTALUM, CHIP 2.2uF 10% 10V
C320	1-164-156-11	s	CERAMIC 0.1uF 25V
C321	1-164-156-11	s	CERAMIC 0.1uF 25V
C322	1-135-177-21	s	TANTALUM, CHIP 1uF 10% 25V
C325	1-135-161-21	s	TANTALUM, CHIP 22uF 10% 10V
C326	1-164-156-11	s	CERAMIC 0.1uF 25V
C327	1-164-156-11	s	CERAMIC 0.1uF 25V
C328	1-135-076-21	s	TANTALUM, CHIP 1uF 10% 35V
C329	1-135-076-21	s	TANTALUM, CHIP 1uF 10% 35V
C330	1-164-156-11	s	CERAMIC 0.1uF 25V
C331	1-164-156-11	s	CERAMIC 0.1uF 25V
C332	1-164-156-11	s	CERAMIC 0.1uF 25V
C333	1-135-155-21	s	TANTALUM, CHIP 4.7uF 10% 16V
C334	1-162-908-11	s	CERAMIC 3PF 0.25PF 50V
C335	1-162-927-11	s	CERAMIC, CHIP 100PF 5% 50V
C336	1-135-216-11	s	TANTALUM, CHIP 10uF 20% 10V
C337	1-135-216-11	s	TANTALUM, CHIP 10uF 20% 10V
C338	1-164-156-11	s	CERAMIC 0.1uF 25V
C339	1-135-177-21	s	TANTALUM, CHIP 1uF 10% 25V
C340	1-164-156-11	s	CERAMIC 0.1uF 25V
C341	1-162-915-11	s	CERAMIC, CHIP 10PF 5PF 50V
C342	1-164-156-11	s	CERAMIC 0.1uF 25V
C500	1-135-216-11	s	TANTALUM, CHIP 10uF 20% 10V
C501	1-135-155-21	s	TANTALUM, CHIP 4.7uF 10% 16V
C502	1-164-156-11	s	CERAMIC 0.1uF 25V
C503	1-162-907-11	s	CERAMIC, CHIP 2PF 50V
C504	1-164-156-11	s	CERAMIC 0.1uF 25V
C505	1-162-927-11	s	CERAMIC, CHIP 100PF 5% 50V
C506	1-126-397-11	s	ELECT, CHIP 33uF 20% 25V

(PR-168 BOARD)

Ref. No. or Q'ty	Part No.	SP	Description
C507	1-135-216-11	s	TANTALUM, CHIP 10uF 20% 10V
C508	1-135-216-11	s	TANTALUM, CHIP 10uF 20% 10V
C509	1-164-156-11	s	CERAMIC 0.1uF 25V
C510	1-164-156-11	s	CERAMIC 0.1uF 25V
C511	1-164-156-11	s	CERAMIC 0.1uF 25V
C512	1-164-156-11	s	CERAMIC 0.1uF 25V
C513	1-164-156-11	s	CERAMIC 0.1uF 25V
C515	1-164-156-11	s	CERAMIC 0.1uF 25V
C516	1-164-156-11	s	CERAMIC 0.1uF 25V
C517	1-164-156-11	s	CERAMIC 0.1uF 25V
C518	1-164-156-11	s	CERAMIC 0.1uF 25V
C519	1-164-156-11	s	CERAMIC 0.1uF 25V
C520	1-135-177-21	s	TANTALUM, CHIP 1uF 10% 25V
C523	1-135-161-21	s	TANTALUM, CHIP 22uF 10% 10V
C524	1-164-156-11	s	CERAMIC 0.1uF 25V
C525	1-164-156-11	s	CERAMIC 0.1uF 25V
C526	1-135-076-21	s	TANTALUM, CHIP 1uF 10% 35V
C527	1-135-076-21	s	TANTALUM, CHIP 1uF 10% 35V
C528	1-164-156-11	s	CERAMIC 0.1uF 25V
C529	1-164-156-11	s	CERAMIC 0.1uF 25V
C530	1-162-908-11	s	CERAMIC 3PF 0.25PF 50V
C531	1-162-927-11	s	CERAMIC, CHIP 100PF 5% 50V
C532	1-135-216-11	s	TANTALUM, CHIP 10uF 20% 10V
C533	1-135-216-11	s	TANTALUM, CHIP 10uF 20% 10V
C534	1-164-156-11	s	CERAMIC 0.1uF 25V
C535	1-135-177-21	s	TANTALUM, CHIP 1uF 10% 25V
C536	1-164-156-11	s	CERAMIC 0.1uF 25V
C537	1-162-915-11	s	CERAMIC, CHIP 10PF 5PF 50V
C538	1-164-156-11	s	CERAMIC 0.1uF 25V
CN1	1-691-847-11	s	CONNECTOR, BOARD TO BOARD 50P
D100	8-719-800-76	s	DIODE 1SS226
D300	8-719-800-76	s	DIODE 1SS226
D500	8-719-800-76	s	DIODE 1SS226
IC1	8-759-635-27	s	IC M62352GP
IC2	8-759-990-61	s	IC PCF8574T
IC3	8-759-142-20	s	IC UPC4062G2
IC4	8-759-142-20	s	IC UPC4062G2
IC5	8-759-300-71	s	IC MC14053BF
IC6	8-759-142-19	s	IC UPC4064G
IC7	8-759-234-77	s	IC TC4S66F
IC8	8-759-054-63	s	IC TLC339CNS
IC9	8-759-066-68	s	IC REF-03GS
IC10	8-759-234-20	s	IC TC7S08F
IC100	8-759-054-61	s	IC CLC505AJE
IC101	8-759-142-20	s	IC UPC4062G2
IC102	8-759-142-20	s	IC UPC4062G2
IC103	8-759-030-49	s	IC MC1495M
IC104	8-759-142-20	s	IC UPC4062G2
IC105	8-759-054-61	s	IC CLC505AJE
IC300	8-759-054-61	s	IC CLC505AJE
IC301	8-759-142-20	s	IC UPC4062G2
IC302	8-759-142-20	s	IC UPC4062G2
IC303	8-759-030-49	s	IC MC1495M
IC304	8-759-142-20	s	IC UPC4062G2
IC305	8-759-054-61	s	IC CLC505AJE
IC500	8-759-054-61	s	IC CLC505AJE
IC501	8-759-142-20	s	IC UPC4062G2
IC502	8-759-142-20	s	IC UPC4062G2

(PR-168 BOARD)

Ref. No. or Q'ty	Part No.	SP	Description
IC503	8-759-030-49	s	IC MC1495M
IC504	8-759-142-20	s	IC UPC4062G2
IC505	8-759-054-61	s	IC CLC505AJE
Q1	8-729-805-25	s	TRANSISTOR 2SB1121-S
Q2	8-729-143-14	s	TRANSISTOR 2SC4176-B35
Q3	8-729-805-25	s	TRANSISTOR 2SB1121-S
Q4	8-729-807-16	s	TRANSISTOR 2SD1621-R
Q5	8-729-920-99	s	TRANSISTOR DTA114EU
Q6	8-729-143-14	s	TRANSISTOR 2SC4176-B35
Q7	8-729-143-07	s	TRANSISTOR 2SA1610-Y33
Q100	8-769-401-67	s	TRANSISTOR 3SK163-1
Q101	8-729-143-07	s	TRANSISTOR 2SA1610-Y33
Q102	8-729-143-14	s	TRANSISTOR 2SC4176-B35
Q103	8-729-143-07	s	TRANSISTOR 2SA1610-Y33
Q104	8-729-143-07	s	TRANSISTOR 2SA1610-Y33
Q105	8-729-143-07	s	TRANSISTOR 2SA1610-Y33
Q106	8-729-425-41	s	TRANSISTOR 2SK1374
Q107	8-729-143-14	s	TRANSISTOR 2SC4176-B35
Q108	8-729-117-16	s	TRANSISTOR 2SA1611-M6
Q109	8-729-143-14	s	TRANSISTOR 2SC4176-B35
Q110	8-729-117-16	s	TRANSISTOR 2SA1611-M6
Q111	8-729-143-14	s	TRANSISTOR 2SC4176-B35
Q112	8-729-143-07	s	TRANSISTOR 2SA1610-Y33
Q113	8-729-143-07	s	TRANSISTOR 2SA1610-Y33
Q114	8-729-143-14	s	TRANSISTOR 2SC4176-B35
Q300	8-769-401-67	s	TRANSISTOR 3SK163-1
Q301	8-729-143-07	s	TRANSISTOR 2SA1610-Y33
Q302	8-729-143-14	s	TRANSISTOR 2SC4176-B35
Q303	8-729-143-07	s	TRANSISTOR 2SA1610-Y33
Q304	8-729-143-07	s	TRANSISTOR 2SA1610-Y33
Q305	8-729-143-07	s	TRANSISTOR 2SA1610-Y33
Q306	8-729-425-41	s	TRANSISTOR 2SK1374
Q307	8-729-143-14	s	TRANSISTOR 2SC4176-B35
Q308	8-729-117-16	s	TRANSISTOR 2SA1611-M6
Q309	8-729-143-14	s	TRANSISTOR 2SC4176-B35
Q310	8-729-117-16	s	TRANSISTOR 2SA1611-M6
Q311	8-729-143-14	s	TRANSISTOR 2SC4176-B35
Q312	8-729-143-07	s	TRANSISTOR 2SA1610-Y33
Q313	8-729-143-07	s	TRANSISTOR 2SA1610-Y33
Q314	8-729-143-14	s	TRANSISTOR 2SC4176-B35
Q500	8-769-401-67	s	TRANSISTOR 3SK163-1
Q501	8-729-143-07	s	TRANSISTOR 2SA1610-Y33
Q502	8-729-143-14	s	TRANSISTOR 2SC4176-B35
Q503	8-729-143-07	s	TRANSISTOR 2SA1610-Y33
Q504	8-729-143-07	s	TRANSISTOR 2SA1610-Y33
Q505	8-729-143-07	s	TRANSISTOR 2SA1610-Y33
Q506	8-729-425-41	s	TRANSISTOR 2SK1374
Q507	8-729-143-14	s	TRANSISTOR 2SC4176-B35
Q508	8-729-117-16	s	TRANSISTOR 2SA1611-M6
Q509	8-729-143-14	s	TRANSISTOR 2SC4176-B35
Q510	8-729-117-16	s	TRANSISTOR 2SA1611-M6
Q511	8-729-143-14	s	TRANSISTOR 2SC4176-B35
Q512	8-729-143-07	s	TRANSISTOR 2SA1610-Y33
Q513	8-729-143-07	s	TRANSISTOR 2SA1610-Y33
Q514	8-729-143-14	s	TRANSISTOR 2SC4176-B35
R1	1-216-797-11	s	METAL, CHIP 10 5% 1/16W
R2	1-216-797-11	s	METAL, CHIP 10 5% 1/16W
R3	1-216-797-11	s	METAL, CHIP 10 5% 1/16W

(PR-168 BOARD)

Ref. No. or Q'ty	Part No.	SP	Description
R4	1-216-797-11	s	METAL, CHIP 10 5% 1/16W
R5	1-216-797-11	s	METAL, CHIP 10 5% 1/16W
R6	1-218-883-11	s	METAL 33K 0.50% 1/16W
R7	1-218-883-11	s	METAL 33K 0.50% 1/16W
R8	1-218-716-11	s	METAL 10K 0.50% 1/16W
R9	1-216-804-11	s	METAL 39K 0.50% 1/16W
R10	1-218-883-11	s	METAL 33K 0.50% 1/16W
R11	1-218-675-11	s	METAL 200 0.50% 1/16W
R12	1-218-716-11	s	METAL 10K 0.50% 1/16W
R13	1-216-821-11	s	METAL, CHIP 1K 5% 1/16W
R14	1-216-821-11	s	METAL, CHIP 1K 5% 1/16W
R15	1-218-716-11	s	METAL 10K 0.50% 1/16W
R16	1-218-664-11	s	METAL 68 0.50% 1/16W
R17	1-218-706-11	s	METAL 3.9K 0.50% 1/16W
R18	1-218-716-11	s	METAL 10K 0.50% 1/16W
R19	1-218-883-11	s	METAL 33K 0.50% 1/16W
R20	1-218-664-11	s	METAL 68 0.50% 1/16W
R21	1-218-344-11	s	METAL 7.5K 0.50% 1/16W
R22	1-218-288-11	s	METAL, CHIP 300 5% 1/16W
R23	1-216-865-11	s	METAL, CHIP 3K 1/16W
R24	1-218-664-11	s	METAL 68 0.50% 1/16W
R26	1-218-723-11	s	METAL 20K 0.50% 1/16W
R27	1-218-344-11	s	METAL 7.5K 0.50% 1/16W
R28	1-218-716-11	s	METAL 10K 0.50% 1/16W
R29	1-218-677-11	s	METAL 240 0.50% 1/16W
R30	1-218-675-11	s	METAL 200 0.50% 1/16W
R31	1-218-675-11	s	METAL 200 0.50% 1/16W
R32	1-218-708-11	s	METAL 4.7K 0.50% 1/16W
R33	1-216-821-11	s	METAL, CHIP 1K 5% 1/16W
R34	1-216-821-11	s	METAL, CHIP 1K 5% 1/16W
R35	1-216-821-11	s	METAL, CHIP 1K 5% 1/16W
R36	1-216-821-11	s	METAL, CHIP 1K 5% 1/16W
R37	1-218-345-11	s	METAL 9.1K 0.50% 1/16W
R38	1-218-701-11	s	METAL 2.4K 0.50% 1/16W
R39	1-218-272-11	s	METAL 5.1K 0.50% 1/16W
R40	1-218-272-11	s	METAL 5.1K 0.50% 1/16W
R41	1-218-740-11	s	METAL 100K 0.50% 1/16W
R42	1-218-272-11	s	METAL 5.1K 0.50% 1/16W
R43	1-218-272-11	s	METAL 5.1K 0.50% 1/16W
R44	1-218-271-11	s	METAL 2K 0.50% 1/16W
R45	1-218-675-11	s	METAL 200 0.50% 1/16W
R46	1-216-821-11	s	METAL, CHIP 1K 5% 1/16W
R47	1-218-883-11	s	METAL 33K 0.50% 1/16W
R48	1-218-716-11	s	METAL 10K 0.50% 1/16W
R49	1-218-716-11	s	METAL 10K 0.50% 1/16W
R50	1-218-675-11	s	METAL 200 0.50% 1/16W
R51	1-216-817-11	s	METAL, CHIP 470 5% 1/16W
R52	1-218-675-11	s	METAL 200 0.50% 1/16W
R101	1-218-716-11	s	METAL 10K 0.50% 1/16W
R102	1-216-821-11	s	METAL, CHIP 1K 5% 1/16W
R103	1-218-295-11	s	METAL 5.6K 0.50% 1/16W
R104	1-218-695-11	s	METAL 1.3K 0.50% 1/16W
R105	1-218-749-11	s	METAL 240K 0.50% 1/16W
R106	1-218-664-11	s	METAL 68 0.50% 1/16W
R107	1-216-821-11	s	METAL, CHIP 1K 5% 1/16W
R108	1-218-313-11	s	METAL, CHIP 560 1% 1/16W
R109	1-218-752-11	s	METAL 330K 0.50% 1/16W
R110	1-218-288-11	s	METAL, CHIP 300 5% 1/16W
R111	1-218-668-11	s	METAL 100 0.50% 1/16W

(PR-168 BOARD)

Ref. No. or Q'ty	Part No.	SP	Description
R112	1-218-740-11	s	METAL 100K 0.50% 1/16W
R113	1-218-716-11	s	METAL 10K 0.50% 1/16W
R114	1-218-708-11	s	METAL 4.7K 0.50% 1/16W
R115	1-218-288-11	s	METAL, CHIP 300 5% 1/16W
R116	1-216-820-11	s	METAL, CHIP 820 5% 1/16W
R117	1-216-821-11	s	METAL, CHIP 1K 5% 1/16W
R118	1-218-698-11	s	METAL 1.8K 0.50% 1/16W
R119	1-216-803-11	s	METAL, CHIP 33 5% 1/16W
R120	1-218-720-11	s	METAL 15K 0.50% 1/16W
R121	1-218-670-11	s	METAL 120 0.50% 1/16W
R122	1-218-716-11	s	METAL 10K 0.50% 1/16W
R123	1-218-271-11	s	METAL 2K 0.50% 1/16W
R124	1-218-271-11	s	METAL 2K 0.50% 1/16W
R125	1-218-344-11	s	METAL 7.5K 0.50% 1/16W
R126	1-218-723-11	s	METAL 20K 0.50% 1/16W
R127	1-216-836-11	s	METAL, CHIP 18K 5% 1/16W
R128	1-218-706-11	s	METAL 3.9K 0.50% 1/16W
R129	1-218-271-11	s	METAL 2K 0.50% 1/16W
R130	1-216-820-11	s	METAL, CHIP 820 5% 1/16W
R131	1-218-664-11	s	METAL 68 0.50% 1/16W
R132	1-218-664-11	s	METAL 68 0.50% 1/16W
R133	1-218-344-11	s	METAL 7.5K 0.50% 1/16W
R134	1-218-344-11	s	METAL 7.5K 0.50% 1/16W
R135	1-218-484-11	s	METAL 750 0.50% 1/16W
R136	1-218-288-11	s	METAL, CHIP 300 5% 1/16W
R137	1-218-288-11	s	METAL, CHIP 300 5% 1/16W
R138	1-218-704-11	s	METAL 3.3K 0.50% 1/16W
R139	1-218-271-11	s	METAL 2K 0.50% 1/16W
R140	1-216-812-11	s	METAL, CHIP 180 5% 1/16W
R141	1-216-834-11	s	METAL, CHIP 12K 5% 1/16W
R142	1-218-724-11	s	METAL 22K 0.50% 1/16W
R143	1-218-668-11	s	METAL 100 0.50% 1/16W
R144	1-218-705-11	s	METAL 3.6K 0.50% 1/16W
R145	1-216-823-11	s	METAL, CHIP 1.5K 5% 1/16W
R146	1-218-272-11	s	METAL 5.1K 0.50% 1/16W
R147	1-218-457-11	s	METAL 910 0.50% 1/16W
R148	1-218-706-11	s	METAL 3.9K 0.50% 1/16W
R149	1-218-749-11	s	METAL 240K 0.50% 1/16W
R150	1-218-664-11	s	METAL 68 0.50% 1/16W
R151	1-216-821-11	s	METAL, CHIP 1K 5% 1/16W
R152	1-218-883-11	s	METAL 33K 0.50% 1/16W
R153	1-218-668-11	s	METAL 100 0.50% 1/16W
R154	1-218-668-11	s	METAL 100 0.50% 1/16W
R155	1-218-668-11	s	METAL 100 0.50% 1/16W
R156	1-218-720-11	s	METAL 15K 0.50% 1/16W
R157	1-218-688-11	s	METAL 680 0.50% 1/16W
R158	1-218-716-11	s	METAL 10K 0.50% 1/16W
R159	1-218-716-11	s	METAL 10K 0.50% 1/16W
R160	1-216-826-11	s	METAL, CHIP 2.7K 5% 1/16W
R161	1-216-821-11	s	METAL, CHIP 1K 5% 1/16W
R162	1-216-826-11	s	METAL, CHIP 2.7K 5% 1/16W
R163	1-218-688-11	s	METAL 680 0.50% 1/16W
R166	1-218-668-11	s	METAL 100 0.50% 1/16W
R167	1-218-668-11	s	METAL 100 0.50% 1/16W
R168	1-218-664-11	s	METAL 68 0.50% 1/16W
R169	1-216-823-11	s	METAL, CHIP 1.5K 5% 1/16W
R170	1-216-821-11	s	METAL, CHIP 1K 5% 1/16W
R171	1-218-285-11	s	METAL, CHIP 75 5% 1/16W
R172	1-218-668-11	s	METAL 100 0.50% 1/16W

(PR-168 BOARD)

Ref. No. or Q'ty	Part No.	SP	Description
R173	1-218-707-11	s	METAL 4.3K 0.50% 1/16W
R174	1-218-344-11	s	METAL 7.5K 0.50% 1/16W
R175	1-218-883-11	s	METAL 33K 0.50% 1/16W
R176	1-218-664-11	s	METAL 68 0.50% 1/16W
R177	1-218-720-11	s	METAL 15K 0.50% 1/16W
R300	1-216-821-11	s	METAL, CHIP 1K 5% 1/16W
R301	1-218-740-11	s	METAL 100K 0.50% 1/16W
R303	1-218-675-11	s	METAL 200 0.50% 1/16W
R304	1-218-716-11	s	METAL 10K 0.50% 1/16W
R305	1-216-821-11	s	METAL, CHIP 1K 5% 1/16W
R306	1-218-695-11	s	METAL 1.3K 0.50% 1/16W
R307	1-218-295-11	s	METAL 5.6K 0.50% 1/16W
R308	1-218-749-11	s	METAL 240K 0.50% 1/16W
R309	1-218-664-11	s	METAL 68 0.50% 1/16W
R310	1-216-821-11	s	METAL, CHIP 1K 5% 1/16W
R311	1-218-700-11	s	METAL 2.2K 0.50% 1/16W
R312	1-218-288-11	s	METAL, CHIP 300 5% 1/16W
R313	1-218-313-11	s	METAL, CHIP 560 1% 1/16W
R314	1-218-752-11	s	METAL 330K 0.50% 1/16W
R315	1-218-288-11	s	METAL, CHIP 300 5% 1/16W
R316	1-218-668-11	s	METAL 100 0.50% 1/16W
R317	1-218-740-11	s	METAL 100K 0.50% 1/16W
R318	1-218-716-11	s	METAL 10K 0.50% 1/16W
R319	1-218-708-11	s	METAL 4.7K 0.50% 1/16W
R320	1-218-288-11	s	METAL, CHIP 300 5% 1/16W
R321	1-216-820-11	s	METAL, CHIP 820 5% 1/16W
R322	1-218-716-11	s	METAL 10K 0.50% 1/16W
R323	1-218-716-11	s	METAL 10K 0.50% 1/16W
R324	1-216-821-11	s	METAL, CHIP 1K 5% 1/16W
R325	1-218-698-11	s	METAL 1.8K 0.50% 1/16W
R326	1-216-803-11	s	METAL, CHIP 33 5% 1/16W
R327	1-218-720-11	s	METAL 15K 0.50% 1/16W
R328	1-218-670-11	s	METAL 120 0.50% 1/16W
R329	1-218-716-11	s	METAL 10K 0.50% 1/16W
R330	1-218-271-11	s	METAL 2K 0.50% 1/16W
R331	1-218-271-11	s	METAL 2K 0.50% 1/16W
R332	1-218-271-11	s	METAL 2K 0.50% 1/16W
R333	1-216-820-11	s	METAL, CHIP 820 5% 1/16W
R334	1-218-664-11	s	METAL 68 0.50% 1/16W
R335	1-218-664-11	s	METAL 68 0.50% 1/16W
R336	1-218-344-11	s	METAL 7.5K 0.50% 1/16W
R337	1-218-344-11	s	METAL 7.5K 0.50% 1/16W
R338	1-218-484-11	s	METAL 750 0.50% 1/16W
R339	1-218-288-11	s	METAL, CHIP 300 5% 1/16W
R340	1-218-288-11	s	METAL, CHIP 300 5% 1/16W
R341	1-218-704-11	s	METAL 3.3K 0.50% 1/16W
R342	1-218-271-11	s	METAL 2K 0.50% 1/16W
R343	1-216-812-11	s	METAL, CHIP 180 5% 1/16W
R344	1-216-834-11	s	METAL, CHIP 12K 5% 1/16W
R345	1-218-724-11	s	METAL 22K 0.50% 1/16W
R346	1-218-668-11	s	METAL 100 0.50% 1/16W
R347	1-218-705-11	s	METAL 3.6K 0.50% 1/16W
R348	1-216-823-11	s	METAL, CHIP 1.5K 5% 1/16W
R349	1-218-272-11	s	METAL 5.1K 0.50% 1/16W
R350	1-218-457-11	s	METAL 910 0.50% 1/16W
R351	1-218-706-11	s	METAL 3.9K 0.50% 1/16W
R352	1-218-749-11	s	METAL 240K 0.50% 1/16W
R353	1-218-664-11	s	METAL 68 0.50% 1/16W
R354	1-216-821-11	s	METAL, CHIP 1K 5% 1/16W

(PR-168 BOARD)

Ref. No. or Q'ty	Part No.	SP	Description
R355	1-218-883-11	s	METAL 33K 0.50% 1/16W
R356	1-218-668-11	s	METAL 100 0.50% 1/16W
R357	1-218-668-11	s	METAL 100 0.50% 1/16W
R358	1-218-668-11	s	METAL 100 0.50% 1/16W
R359	1-218-720-11	s	METAL 15K 0.50% 1/16W
R360	1-218-716-11	s	METAL 10K 0.50% 1/16W
R361	1-218-716-11	s	METAL 10K 0.50% 1/16W
R362	1-218-688-11	s	METAL 680 0.50% 1/16W
R363	1-216-826-11	s	METAL, CHIP 2.7K 5% 1/16W
R364	1-216-821-11	s	METAL, CHIP 1K 5% 1/16W
R365	1-216-826-11	s	METAL, CHIP 2.7K 5% 1/16W
R366	1-218-688-11	s	METAL 680 0.50% 1/16W
R369	1-218-668-11	s	METAL 100 0.50% 1/16W
R370	1-218-668-11	s	METAL 100 0.50% 1/16W
R371	1-218-664-11	s	METAL 68 0.50% 1/16W
R372	1-216-823-11	s	METAL, CHIP 1.5K 5% 1/16W
R373	1-216-821-11	s	METAL, CHIP 1K 5% 1/16W
R374	1-218-285-11	s	METAL, CHIP 75 5% 1/16W
R375	1-218-668-11	s	METAL 100 0.50% 1/16W
R376	1-218-707-11	s	METAL 4.3K 0.50% 1/16W
R377	1-218-344-11	s	METAL 7.5K 0.50% 1/16W
R378	1-218-883-11	s	METAL 33K 0.50% 1/16W
R379	1-218-664-11	s	METAL 68 0.50% 1/16W
R380	1-218-720-11	s	METAL 15K 0.50% 1/16W
R501	1-218-716-11	s	METAL 10K 0.50% 1/16W
R502	1-216-821-11	s	METAL, CHIP 1K 5% 1/16W
R503	1-218-295-11	s	METAL 5.6K 0.50% 1/16W
R504	1-218-695-11	s	METAL 1.3K 0.50% 1/16W
R505	1-218-749-11	s	METAL 240K 0.50% 1/16W
R506	1-218-664-11	s	METAL 68 0.50% 1/16W
R507	1-216-821-11	s	METAL, CHIP 1K 5% 1/16W
R508	1-218-313-11	s	METAL, CHIP 560 1% 1/16W
R509	1-218-752-11	s	METAL 330K 0.50% 1/16W
R510	1-218-288-11	s	METAL, CHIP 300 5% 1/16W
R511	1-218-668-11	s	METAL 100 0.50% 1/16W
R512	1-218-740-11	s	METAL 100K 0.50% 1/16W
R513	1-218-716-11	s	METAL 10K 0.50% 1/16W
R514	1-218-708-11	s	METAL 4.7K 0.50% 1/16W
R515	1-218-288-11	s	METAL, CHIP 300 5% 1/16W
R516	1-216-820-11	s	METAL, CHIP 820 5% 1/16W
R517	1-216-821-11	s	METAL, CHIP 1K 5% 1/16W
R518	1-218-698-11	s	METAL 1.8K 0.50% 1/16W
R519	1-216-803-11	s	METAL, CHIP 33 5% 1/16W
R520	1-218-720-11	s	METAL 15K 0.50% 1/16W
R521	1-218-670-11	s	METAL 120 0.50% 1/16W
R522	1-218-716-11	s	METAL 10K 0.50% 1/16W
R523	1-218-271-11	s	METAL 2K 0.50% 1/16W
R524	1-218-271-11	s	METAL 2K 0.50% 1/16W
R525	1-218-723-11	s	METAL 20K 0.50% 1/16W
R526	1-218-344-11	s	METAL 7.5K 0.50% 1/16W
R527	1-216-836-11	s	METAL, CHIP 18K 5% 1/16W
R528	1-218-706-11	s	METAL 3.9K 0.50% 1/16W
R529	1-218-271-11	s	METAL 2K 0.50% 1/16W
R530	1-216-820-11	s	METAL, CHIP 820 5% 1/16W
R531	1-218-664-11	s	METAL 68 0.50% 1/16W
R532	1-218-664-11	s	METAL 68 0.50% 1/16W
R533	1-218-344-11	s	METAL 7.5K 0.50% 1/16W
R534	1-218-344-11	s	METAL 7.5K 0.50% 1/16W
R535	1-218-484-11	s	METAL 750 0.50% 1/16W

(PR-168 BOARD)

Ref. No. or Q'ty	Part No.	SP	Description
R536	1-218-288-11	s	METAL, CHIP 300 5% 1/16W
R537	1-218-288-11	s	METAL, CHIP 300 5% 1/16W
R538	1-218-704-11	s	METAL 3.3K 0.50% 1/16W
R539	1-218-271-11	s	METAL 2K 0.50% 1/16W
R540	1-216-812-11	s	METAL, CHIP 180 5% 1/16W
R541	1-216-834-11	s	METAL, CHIP 12K 5% 1/16W
R542	1-218-724-11	s	METAL 22K 0.50% 1/16W
R543	1-218-705-11	s	METAL 3.6K 0.50% 1/16W
R544	1-216-823-11	s	METAL, CHIP 1.5K 5% 1/16W
R545	1-218-668-11	s	METAL 100 0.50% 1/16W
R546	1-218-272-11	s	METAL 5.1K 0.50% 1/16W
R547	1-218-457-11	s	METAL 910 0.50% 1/16W
R548	1-218-706-11	s	METAL 3.9K 0.50% 1/16W
R549	1-218-749-11	s	METAL 240K 0.50% 1/16W
R550	1-218-664-11	s	METAL 68 0.50% 1/16W
R551	1-216-821-11	s	METAL, CHIP 1K 5% 1/16W
R552	1-218-883-11	s	METAL 33K 0.50% 1/16W
R553	1-218-668-11	s	METAL 100 0.50% 1/16W
R554	1-218-668-11	s	METAL 100 0.50% 1/16W
R555	1-218-668-11	s	METAL 100 0.50% 1/16W
R556	1-218-716-11	s	METAL 10K 0.50% 1/16W
R557	1-218-716-11	s	METAL 10K 0.50% 1/16W
R558	1-218-720-11	s	METAL 15K 0.50% 1/16W
R559	1-218-688-11	s	METAL 680 0.50% 1/16W
R560	1-216-826-11	s	METAL, CHIP 2.7K 5% 1/16W
R561	1-216-821-11	s	METAL, CHIP 1K 5% 1/16W
R562	1-216-826-11	s	METAL, CHIP 2.7K 5% 1/16W
R563	1-218-688-11	s	METAL 680 0.50% 1/16W
R566	1-218-668-11	s	METAL 100 0.50% 1/16W
R567	1-218-668-11	s	METAL 100 0.50% 1/16W
R568	1-218-664-11	s	METAL 68 0.50% 1/16W
R569	1-216-823-11	s	METAL, CHIP 1.5K 5% 1/16W
R570	1-216-821-11	s	METAL, CHIP 1K 5% 1/16W
R571	1-218-285-11	s	METAL, CHIP 75 5% 1/16W
R572	1-218-668-11	s	METAL 100 0.50% 1/16W
R573	1-218-707-11	s	METAL 4.3K 0.50% 1/16W
R574	1-218-344-11	s	METAL 7.5K 0.50% 1/16W
R575	1-218-883-11	s	METAL 33K 0.50% 1/16W
R576	1-218-664-11	s	METAL 68 0.50% 1/16W
R577	1-218-720-11	s	METAL 15K 0.50% 1/16W
RV1	1-228-476-00	s	RES, ADJ, METAL 50K
RV100	1-237-031-11	s	RES, ADJ, METAL 200
RV101	1-237-030-11	s	RES, ADJ, CERMET 100
RV102	1-228-476-00	s	RES, ADJ, METAL 50K
RV103	1-237-031-11	s	RES, ADJ, METAL 200
RV104	1-237-038-11	s	RES, ADJ, METAL 50K
RV105	1-237-034-11	s	RES, ADJ, METAL 2K
RV300	1-237-031-11	s	RES, ADJ, METAL 200
RV301	1-237-030-11	s	RES, ADJ, CERMET 100
RV302	1-237-031-11	s	RES, ADJ, METAL 200
RV303	1-237-038-11	s	RES, ADJ, METAL 50K
RV304	1-237-034-11	s	RES, ADJ, METAL 2K
RV500	1-237-031-11	s	RES, ADJ, METAL 200
RV501	1-237-030-11	s	RES, ADJ, CERMET 100
RV502	1-228-476-00	s	RES, ADJ, METAL 50K
RV503	1-237-031-11	s	RES, ADJ, METAL 200
RV504	1-237-038-11	s	RES, ADJ, METAL 50K
RV505	1-237-034-11	s	RES, ADJ, METAL 2K

(PR-168 BOARD)

Ref. No. or Q'ty	Part No.	SP	Description
TH300	1-800-200-00	s	THERMISTOR S-3K

RE-76 BOARD

Ref. No. or Q'ty	Part No.	SP	Description
1pc	A-8271-267-A	o	MOUNTED CIRCUIT BOARD, RE-76
C1	1-124-489-11	s	ELECT 150uF 20% 25V
C2	1-136-165-00	s	FILM 0.1uF 5% 50V
C3	1-124-489-11	s	ELECT 150uF 20% 25V
C4	1-124-489-11	s	ELECT 150uF 20% 25V
C5	1-136-165-00	s	FILM 0.1uF 5% 50V
C6	1-136-165-00	s	FILM 0.1uF 5% 50V
C7	1-124-604-00	s	ELECT 330uF 20% 10V
C8	1-136-177-00	s	FILM 1uF 5% 50V
C9	1-126-516-11	s	ELECT 120uF 20% 16V
C10	1-164-360-11	s	CERAMIC 0.1uF 16V
C11	1-164-360-11	s	CERAMIC 0.1uF 16V
C12	1-126-516-11	s	ELECT 120uF 20% 16V
C13	1-136-177-00	s	FILM 1uF 5% 50V
C14	1-124-604-00	s	ELECT 330uF 20% 10V
C15	1-124-604-00	s	ELECT 330uF 20% 10V
C16	1-136-165-00	s	FILM 0.1uF 5% 50V
C17	1-164-360-11	s	CERAMIC 0.1uF 16V
C18	1-164-360-11	s	CERAMIC 0.1uF 16V
C19	1-135-091-00	s	TANTALUN, CHIP 1uF 10% 16V
C20	1-135-216-11	s	TANTALUM, CHIP 10uF 20% 10V
C21	1-137-194-11	s	FILM 0.47uF 5% 50V
C22	1-137-194-11	s	FILM 0.47uF 5% 50V
C23	1-131-374-00	s	TANTALUM 33uF 10% 16V
C24	1-135-216-11	s	TANTALUM, CHIP 10uF 20% 10V
C25	1-164-360-11	s	CERAMIC 0.1uF 16V
C26	1-164-392-11	s	CERAMIC 390PF 5% 50V
C31	1-136-177-00	s	FILM 1uF 5% 50V
CN1	1-580-561-11	o	PIN, CONNECTOR (PC BOARD) 12P
D1	8-719-023-54	s	DIODE EA60QC06-F
D2	8-719-800-76	s	DIODE 1SS226
D3	8-719-023-53	s	DIODE EA30QS04-F
D4	8-719-023-53	s	DIODE EA30QS04-F
D5	8-719-800-76	s	DIODE 1SS226
IC1	8-759-937-36	s	IC TL1451ACNS
L1	1-410-283-11	s	48uH (WITH CORE)
L2	1-424-314-21	s	COIL, CHOKE 150uH
L3	1-410-283-11	s	48uH (WITH CORE)
L4	1-424-314-21	s	COIL, CHOKE 150uH
L5	1-410-283-11	s	48uH (WITH CORE)
Q1	8-729-117-32	s	TRANSISTOR 2SC4177
Q2	8-729-117-32	s	TRANSISTOR 2SC4177
Q3	8-729-117-16	s	TRANSISTOR 2SA1611-M6
Q4	8-729-322-45	s	TRANSISTOR 2SJ182S
Q5	8-729-322-45	s	TRANSISTOR 2SJ182S
Q6	8-729-117-32	s	TRANSISTOR 2SC4177
Q7	8-729-117-32	s	TRANSISTOR 2SC4177
Q8	8-729-117-16	s	TRANSISTOR 2SA1611-M6
Q9	8-729-322-45	s	TRANSISTOR 2SJ182S
Q10	8-729-322-45	s	TRANSISTOR 2SJ182S
Q11	8-729-117-32	s	TRANSISTOR 2SC4177
Q12	8-729-117-32	s	TRANSISTOR 2SC4177
Q13	8-729-117-32	s	TRANSISTOR 2SC4177
R1	1-218-708-11	s	METAL 4.7K 0.50% 1/16W
R2	1-218-704-11	s	METAL 3.3K 0.50% 1/16W
R3	1-218-708-11	s	METAL 4.7K 0.50% 1/16W
R4	1-216-801-11	s	METAL 22 0.50% 1/16W
R5	1-216-801-11	s	METAL 22 0.50% 1/16W
R6	1-216-801-11	s	METAL 22 0.50% 1/16W
R7	1-216-801-11	s	METAL 22 0.50% 1/16W
R8	1-218-708-11	s	METAL 4.7K 0.50% 1/16W
R9	1-218-704-11	s	METAL 3.3K 0.50% 1/16W
R10	1-218-708-11	s	METAL 4.7K 0.50% 1/16W
R11	1-216-838-11	s	METAL, CHIP 27K 5% 1/16W
R12	1-218-714-11	s	METAL 8.2K 0.50% 1/16W
R13	1-218-700-11	s	METAL 2.2K 0.50% 1/16W
R14	1-216-821-11	s	METAL, CHIP 1K 5% 1/16W
R15	1-216-821-11	s	METAL, CHIP 1K 5% 1/16W
R16	1-216-821-11	s	METAL, CHIP 1K 5% 1/16W
R17	1-216-821-11	s	METAL, CHIP 1K 5% 1/16W
R18	1-218-707-11	s	METAL 4.3K 0.50% 1/16W
R19	1-218-725-11	s	METAL 24K 0.50% 1/16W
R20	1-218-716-11	s	METAL 10K 0.50% 1/16W
R21	1-218-716-11	s	METAL 10K 0.50% 1/16W
R22	1-218-732-11	s	METAL 47K 0.50% 1/16W
R23	1-218-732-11	s	METAL 47K 0.50% 1/16W
R24	1-218-716-11	s	METAL 10K 0.50% 1/16W
R25	1-218-716-11	s	METAL 10K 0.50% 1/16W
R26	1-218-740-11	s	METAL 100K 0.50% 1/16W
R27	1-218-716-11	s	METAL 10K 0.50% 1/16W
R28	1-218-716-11	s	METAL 10K 0.50% 1/16W
R29	1-218-746-11	s	METAL 180K 0.50% 1/16W
RV1	1-237-032-11	s	RES, ADJ, METAL 500
RV2	1-237-032-11	s	RES, ADJ, METAL 500

SG-190 BOARD

Ref. No. or Q'ty	Part No.	SP	Description
1pc	A-8271-414-A	o	MOUNTED CIRCUIT BOARD, SG-190
1pc	8-759-512-07	s	IC EPM5128JC-1
2pcs	7-621-772-18	s	SCREW +B 2X4
2pcs	7-627-553-68	s	SCREW, PRECISION +P 2X6
C1	1-164-156-11	s	CERAMIC 0.1uF 25V0%
C3	1-164-156-11	s	CERAMIC 0.1uF 25V0%
C4	1-164-156-11	s	CERAMIC 0.1uF 25V0%
C5	1-126-392-11	s	ELECT, CHIP 100uF 20% 6.3V
C6	1-126-392-11	s	ELECT, CHIP 100uF 20% 6.3V
C7	1-164-156-11	s	CERAMIC 0.1uF 25V0%
C8	1-164-156-11	s	CERAMIC 0.1uF 25V0%
C9	1-135-177-21	s	TANTALUM, CHIP 1uF 10% 25V
C10	1-126-396-11	s	ELECT, CHIP 47uF 20% 16V
C11	1-164-156-11	s	CERAMIC 0.1uF 25V0%
C12	1-135-216-11	s	TANTALUM, CHIP 10uF 20% 10V
C13	1-162-965-11	s	CERAMIC 0.0015uF 10% 50V
C14	1-135-091-00	s	TANTALUN, CHIP 1uF 10% 16V
C15	1-135-091-00	s	TANTALUN, CHIP 1uF 10% 16V
C16	1-164-156-11	s	CERAMIC 0.1uF 25V0%
C17	1-164-156-11	s	CERAMIC 0.1uF 25V0%
C18	1-162-908-11	s	CERAMIC 3PF 0.25PF 50V
C19	1-162-927-11	s	CERAMIC, CHIP 100PF 5% 50V
C20	1-164-380-11	s	CERAMIC 51PF 5% 50V
C21	1-164-156-11	s	CERAMIC 0.1uF 25V0%
C22	1-164-156-11	s	CERAMIC 0.1uF 25V0%
C23	1-162-970-11	s	CERAMIC, CHIP 0.01uF 10% 25V
C24	1-164-156-11	s	CERAMIC 0.1uF 25V0%
C25	1-162-967-11	s	CERAMIC 0.0033uF 10% 50V
C26	1-162-922-11	s	CERAMIC, CHIP 39PF 5% 50V
C27	1-162-928-11	s	CERAMIC 120PF 5% 50V
C28	1-164-156-11	s	CERAMIC 0.1uF 25V0%
C29	1-162-923-11	s	CERAMIC, CHIP 47PF 5% 50V
C30	1-162-916-11	s	CERAMIC, CHIP 12PF 5% 50V
C31	1-164-156-11	s	CERAMIC 0.1uF 25V0%
C32	1-162-919-11	s	CERAMIC, CHIP 22PF 5% 50V
C33	1-162-970-11	s	CERAMIC, CHIP 0.01uF 10% 25V
C34	1-164-156-11	s	CERAMIC 0.1uF 25V0%
C35	1-164-156-11	s	CERAMIC 0.1uF 25V0%
C36	1-164-156-11	s	CERAMIC 0.1uF 25V0%
C37	1-164-156-11	s	CERAMIC 0.1uF 25V0%
C38	1-164-156-11	s	CERAMIC 0.1uF 25V0%
C39	1-164-156-11	s	CERAMIC 0.1uF 25V0%
C40	1-162-963-11	s	CERAMIC, CHIP 680PF 10% 50V
C41	1-164-156-11	s	CERAMIC 0.1uF 25V0%
C42	1-164-156-11	s	CERAMIC 0.1uF 25V0%
C43	1-164-156-11	s	CERAMIC 0.1uF 25V0%
C44	1-164-156-11	s	CERAMIC 0.1uF 25V0%
C45	1-135-161-21	s	TANTALUM, CHIP 22uF 10% 10V
C46	1-164-156-11	s	CERAMIC 0.1uF 25V0%
C47	1-162-957-11	s	CERAMIC 220PF 5% 50V
C48	1-164-156-11	s	CERAMIC 0.1uF 25V0%
C49	1-164-156-11	s	CERAMIC 0.1uF 25V0%
C50	1-164-156-11	s	CERAMIC 0.1uF 25V0%
C51	1-135-156-21	s	TANTALUM, CHIP 6.8uF 10% 6.3V
C52	1-164-156-11	s	CERAMIC 0.1uF 25V0%
C53	1-164-156-11	s	CERAMIC 0.1uF 25V0%
C54	1-135-216-11	s	TANTALUM, CHIP 10uF 20% 10V
C55	1-162-970-11	s	CERAMIC, CHIP 0.01uF 10% 25V
C56	1-164-156-11	s	CERAMIC 0.1uF 25V0%
C57	1-164-156-11	s	CERAMIC 0.1uF 25V0%
C58	1-164-156-11	s	CERAMIC 0.1uF 25V0%
C59	1-135-216-11	s	TANTALUM, CHIP 10uF 20% 10V
C60	1-164-156-11	s	CERAMIC 0.1uF 25V0%
C61	1-164-156-11	s	CERAMIC 0.1uF 25V0%
C62	1-135-161-21	s	TANTALUM, CHIP 22uF 10% 10V
C63	1-135-161-21	s	TANTALUM, CHIP 22uF 10% 10V
C64	1-135-161-21	s	TANTALUM, CHIP 22uF 10% 10V
C65	1-164-156-11	s	CERAMIC 0.1uF 25V0%
C66	1-164-156-11	s	CERAMIC 0.1uF 25V0%
C67	1-164-156-11	s	CERAMIC 0.1uF 25V0%
C68	1-164-156-11	s	CERAMIC 0.1uF 25V0%
C69	1-164-156-11	s	CERAMIC 0.1uF 25V0%
C70	1-162-970-11	s	CERAMIC, CHIP 0.01uF 10% 25V
C71	1-162-970-11	s	CERAMIC, CHIP 0.01uF 10% 25V
C72	1-164-156-11	s	CERAMIC 0.1uF 25V0%
C73	1-135-161-21	s	TANTALUM, CHIP 22uF 10% 10V
C74	1-164-156-11	s	CERAMIC 0.1uF 25V0%
C75	1-164-156-11	s	CERAMIC 0.1uF 25V0%
C76	1-135-161-21	s	TANTALUM, CHIP 22uF 10% 10V
C77	1-164-156-11	s	CERAMIC 0.1uF 25V0%
C78	1-164-156-11	s	CERAMIC 0.1uF 25V0%
C80	1-162-927-11	s	CERAMIC, CHIP 100PF 5% 50V
C81	1-162-927-11	s	CERAMIC, CHIP 100PF 5% 50V
C82	1-162-927-11	s	CERAMIC, CHIP 100PF 5% 50V
C83	1-162-927-11	s	CERAMIC, CHIP 100PF 5% 50V
C84	1-164-156-11	s	CERAMIC 0.1uF 25V0%
C85	1-164-156-11	s	CERAMIC 0.1uF 25V0%
C86	1-164-156-11	s	CERAMIC 0.1uF 25V0%
C87	1-135-177-21	s	TANTALUM, CHIP 1uF 10% 25V
C88	1-135-177-21	s	TANTALUM, CHIP 1uF 10% 25V
C89	1-164-156-11	s	CERAMIC 0.1uF 25V0%
C101	1-135-164-21	s	TANTALUM, CHIP 22uF 20% 10V
C102	1-135-177-21	s	TANTALUM, CHIP 1uF 10% 25V
C103	1-135-177-21	s	TANTALUM, CHIP 1uF 10% 25V
C104	1-135-177-21	s	TANTALUM, CHIP 1uF 10% 25V
C105	1-164-156-11	s	CERAMIC 0.1uF 25V0%
C106	1-135-179-21	s	TANTAL 2.2uF 10% 16V
C107	1-135-179-21	s	TANTAL 2.2uF 10% 16V
C108	1-164-156-11	s	CERAMIC 0.1uF 25V0%
C109	1-164-156-11	s	CERAMIC 0.1uF 25V0%
C110	1-135-216-11	s	TANTALUM, CHIP 10uF 20% 10V (S/N 10001-10100)
C110	1-135-215-21	s	TANTALUM, CHIP 6.8uF 10% 16V
C111	1-135-216-11	s	TANTALUM, CHIP 10uF 20% 10V
C112	1-164-156-11	s	CERAMIC 0.1uF 25V0%
C113	1-135-179-21	s	TANTAL 2.2uF 10% 16V
C114	1-135-179-21	s	TANTAL 2.2uF 10% 16V
C115	1-164-156-11	s	CERAMIC 0.1uF 25V0%
C116	1-164-156-11	s	CERAMIC 0.1uF 25V0%
C117	1-164-156-11	s	CERAMIC 0.1uF 25V0%
C118	1-126-396-11	s	ELECT, CHIP 47uF 20% 16V
C119	1-126-396-11	s	ELECT, CHIP 47uF 20% 16V
C120	1-164-156-11	s	CERAMIC 0.1uF 25V0%
C121	1-162-927-11	s	CERAMIC, CHIP 100PF 5% 50V
C122	1-126-396-11	s	ELECT, CHIP 47uF 20% 16V
C123	1-164-156-11	s	CERAMIC 0.1uF 25V0%
C124	1-164-156-11	s	CERAMIC 0.1uF 25V0%

(SG-190 BOARD)

Ref. No. or Q'ty	Part No.	SP	Description
C125	1-135-216-11	s	TANTALUM, CHIP 10uF 20% 10V
C126	1-135-076-21	s	TANTALUM, CHIP 1uF 10% 35V
C127	1-164-156-11	s	CERAMIC 0.1uF 25V0%
C128	1-164-156-11	s	CERAMIC 0.1uF 25V0%
C129	1-126-940-11	s	ELECT 330uF 20% 25V
C130	1-164-156-11	s	CERAMIC 0.1uF 25V0%
C131	1-135-159-21	s	TANTALUM, CHIP 10uF 10% 20V
C132	1-135-177-21	s	TANTALUM, CHIP 1uF 10% 25V
C133	1-163-109-00	s	CERAMIC, CHIP 47PF 5% 50V
C134	1-163-109-00	s	CERAMIC, CHIP 47PF 5% 50V
C135	1-163-093-00	s	CERAMIC, CHIP 10PF 5% 50V
CN1	1-691-847-11	s	CONNECTOR, BOARD TO BOARD 50P
CNI19	1-540-253-11	s	SOCKET, IC (PLCC)
D1	8-719-421-15	s	DIODE MA8027-L
D2	8-719-421-15	s	DIODE MA8027-L
D3	8-719-800-76	s	DIODE 1SS226
D4	8-719-800-76	s	DIODE 1SS226
D11	8-719-800-76	s	DIODE 1SS226
D12	8-719-021-25	s	DIODE UZM4.7X
IC1	8-759-066-68	s	IC REF-03GS
IC2	8-759-142-19	s	IC UPC4064G
IC3	8-759-054-61	s	IC CLC505AJE
IC4	8-759-239-34	s	IC TC74HC4538AF
IC5	8-759-239-34	s	IC TC74HC4538AF
IC6	8-759-239-34	s	IC TC74HC4538AF
IC7	8-759-973-70	s	IC OP-07CPS
IC8	8-759-980-44	s	IC TL712CPS
IC9	8-759-925-90	s	IC SN74HC74ANS
IC10	8-759-209-90	s	IC TC4S71F
IC11	8-759-925-90	s	IC SN74HC74ANS
IC12	8-759-239-34	s	IC TC74HC4538AF
IC13	8-759-929-21	s	IC TLC27L2CPS
IC14	8-759-009-02	s	IC MC14046BF
IC15	8-759-242-64	s	IC TC4W53F
IC16	8-759-030-50	s	IC MC14490F
IC17	8-759-142-20	s	IC UPC4062G2
IC18	8-759-986-15	s	IC 74ACT74SJ
IC19	8-759-064-16	o	IC 5128-SG190-V1.0
IC20	8-759-239-34	s	IC TC74HC4538AF
IC21	8-759-990-61	s	IC PCF8574T
IC22	8-759-244-06	s	IC TC74AC164F
IC23	8-759-244-06	s	IC TC74AC164F
IC24	8-759-054-61	s	IC CLC505AJE
IC25	8-759-142-20	s	IC UPC4062G2
IC26	8-759-234-20	s	IC TC7S08F
IC31	8-759-605-63	s	IC CXA1297M
IC32	8-759-700-45	s	IC NJM4556M-A
IC33	8-759-990-61	s	IC PCF8574T
IC34	8-759-300-71	s	IC MC14053BF
IC41	8-759-243-09	s	IC TC74AC74F
IC42	8-759-243-09	s	IC TC74AC74F
Q1	8-729-805-25	s	TRANSISTOR 2SB1121-S
Q2	8-729-143-14	s	TRANSISTOR 2SC4176-B35
Q3	8-729-143-07	s	TRANSISTOR 2SA1610-Y33
Q4	8-729-807-16	s	TRANSISTOR 2SD1621-R
Q5	8-729-805-25	s	TRANSISTOR 2SB1121-S

(SG-190 BOARD)

Ref. No. or Q'ty	Part No.	SP	Description
Q6	8-729-143-14	s	TRANSISTOR 2SC4176-B35
Q7	8-729-143-14	s	TRANSISTOR 2SC4176-B35
Q8	8-729-143-14	s	TRANSISTOR 2SC4176-B35
Q9	8-729-143-14	s	TRANSISTOR 2SC4176-B35
Q10	8-729-143-14	s	TRANSISTOR 2SC4176-B35
Q11	8-729-143-07	s	TRANSISTOR 2SA1610-Y33
Q12	8-729-143-14	s	TRANSISTOR 2SC4176-B35
Q13	8-729-143-14	s	TRANSISTOR 2SC4176-B35
Q14	8-729-143-14	s	TRANSISTOR 2SC4176-B35
Q15	8-769-401-67	s	TRANSISTOR 3SK163-1
Q16	8-729-143-14	s	TRANSISTOR 2SC4176-B35
Q17	8-729-143-14	s	TRANSISTOR 2SC4176-B35
Q18	8-729-143-14	s	TRANSISTOR 2SC4176-B35
Q21	8-729-220-93	s	TRANSISTOR 2SK209-G
Q22	8-769-401-67	s	TRANSISTOR 3SK163-1
Q23	8-729-805-25	s	TRANSISTOR 2SB1121-S
Q24	8-729-143-14	s	TRANSISTOR 2SC4176-B35
R1	1-218-271-11	s	METAL 2K 0.50% 1/16W
R2	1-218-272-11	s	METAL 5.1K 0.50% 1/16W
R3	1-218-272-11	s	METAL 5.1K 0.50% 1/16W
R4	1-218-272-11	s	METAL 5.1K 0.50% 1/16W
R5	1-218-272-11	s	METAL 5.1K 0.50% 1/16W
R6	1-216-821-11	s	METAL, CHIP 1K 5% 1/16W
R7	1-216-821-11	s	METAL, CHIP 1K 5% 1/16W
R8	1-216-821-11	s	METAL, CHIP 1K 5% 1/16W
R9	1-216-821-11	s	METAL, CHIP 1K 5% 1/16W
R10	1-218-675-11	s	METAL 200 0.50% 1/16W
R11	1-218-675-11	s	METAL 200 0.50% 1/16W
R12	1-218-344-11	s	METAL 7.5K 0.50% 1/16W
R13	1-218-288-11	s	METAL, CHIP 300 5% 1/16W
R14	1-216-865-11	s	METAL, CHIP 3K 1/16W
R15	1-216-821-11	s	METAL, CHIP 1K 5% 1/16W
R16	1-216-821-11	s	METAL, CHIP 1K 5% 1/16W
R17	1-218-675-11	s	METAL 200 0.50% 1/16W
R18	1-218-664-11	s	METAL 68 0.50% 1/16W
R19	1-218-664-11	s	METAL 68 0.50% 1/16W
R20	1-218-664-11	s	METAL 68 0.50% 1/16W
R21	1-218-664-11	s	METAL 68 0.50% 1/16W
R22	1-218-668-11	s	METAL 100 0.50% 1/16W
R23	1-218-716-11	s	METAL 10K 0.50% 1/16W
R24	1-218-668-11	s	METAL 100 0.50% 1/16W
R25	1-218-482-11	s	METAL 430 0.50% 1/16W
R26	1-218-704-11	s	METAL 3.3K 0.50% 1/16W
R27	1-218-701-11	s	METAL 2.4K 0.50% 1/16W
R28	1-218-716-11	s	METAL 10K 0.50% 1/16W
R29	1-218-716-11	s	METAL 10K 0.50% 1/16W
R30	1-218-716-11	s	METAL 10K 0.50% 1/16W
R31	1-218-716-11	s	METAL 10K 0.50% 1/16W
R32	1-218-688-11	s	METAL 680 0.50% 1/16W
R33	1-218-651-11	s	METAL 20 0.50% 1/16W
R34	1-218-745-11	s	METAL 160K 0.50% 1/16W
R35	1-218-700-11	s	METAL 2.2K 0.50% 1/16W
R37	1-216-821-11	s	METAL, CHIP 1K 5% 1/16W
R38	1-218-289-11	s	METAL, CHIP 510 5% 1/16W
R39	1-218-704-11	s	METAL 3.3K 0.50% 1/16W
R40	1-218-764-11	s	METAL 330K 0.50% 1/10W
R41	1-216-821-11	s	METAL, CHIP 1K 5% 1/16W
R42	1-216-821-11	s	METAL, CHIP 1K 5% 1/16W

(SG-190 BOARD)

Ref. No. or Q'ty	Part No.	SP	Description
R43	1-216-816-11	s	METAL, CHIP 390 5% 1/16W
R44	1-218-271-11	s	METAL 2K 0.50% 1/16W
R45	1-218-697-11	s	METAL 1.6K 0.50% 1/16W
R46	1-218-714-11	s	METAL 8.2K 0.50% 1/16W
R47	1-216-822-11	s	METAL, CHIP 1.2K 5% 1/16W
R48	1-218-708-11	s	METAL 4.7K 0.50% 1/16W
R49	1-218-668-11	s	METAL 100 0.50% 1/16W
R50	1-218-708-11	s	METAL 4.7K 0.50% 1/16W
R51	1-218-704-11	s	METAL 3.3K 0.50% 1/16W
R52	1-218-664-11	s	METAL 68 0.50% 1/16W
R53	1-218-716-11	s	METAL 10K 0.50% 1/16W
R54	1-216-834-11	s	METAL, CHIP 12K 5% 1/16W
R55	1-218-724-11	s	METAL 22K 0.50% 1/16W
R56	1-218-700-11	s	METAL 2.2K 0.50% 1/16W
R57	1-218-700-11	s	METAL 2.2K 0.50% 1/16W
R58	1-218-700-11	s	METAL 2.2K 0.50% 1/16W
R59	1-218-716-11	s	METAL 10K 0.50% 1/16W
R60	1-218-664-11	s	METAL 68 0.50% 1/16W
R61	1-216-821-11	s	METAL, CHIP 1K 5% 1/16W
R62	1-218-752-11	s	METAL 330K 0.50% 1/16W
R63	1-218-748-11	s	METAL 220K 0.50% 1/16W
R64	1-218-752-11	s	METAL 330K 0.50% 1/16W
R65	1-218-744-11	s	METAL 150K 0.50% 1/16W
R66	1-218-668-11	s	METAL 100 0.50% 1/16W
R67	1-218-716-11	s	METAL 10K 0.50% 1/16W
R68	1-218-716-11	s	METAL 10K 0.50% 1/16W
R69	1-218-664-11	s	METAL 68 0.50% 1/16W
R71	1-218-705-11	s	METAL 3.6K 0.50% 1/16W
R72	1-218-714-11	s	METAL 8.2K 0.50% 1/16W
R73	1-218-668-11	s	METAL 100 0.50% 1/16W
R74	1-218-296-11	s	METAL, CHIP 75K 5% 1/16W
R75	1-218-732-11	s	METAL 47K 0.50% 1/16W
R76	1-216-821-11	s	METAL, CHIP 1K 5% 1/16W
R77	1-218-716-11	s	METAL 10K 0.50% 1/16W
R78	1-218-668-11	s	METAL 100 0.50% 1/16W
R79	1-218-664-11	s	METAL 68 0.50% 1/16W
R80	1-218-664-11	s	METAL 68 0.50% 1/16W
R81	1-218-723-11	s	METAL 20K 0.50% 1/16W
R82	1-218-723-11	s	METAL 20K 0.50% 1/16W
R83	1-216-821-11	s	METAL, CHIP 1K 5% 1/16W
R84	1-218-883-11	s	METAL 33K 0.50% 1/16W
R85	1-218-716-11	s	METAL 10K 0.50% 1/16W
R86	1-218-668-11	s	METAL 100 0.50% 1/16W
R87	1-218-664-11	s	METAL 68 0.50% 1/16W
R88	1-218-668-11	s	METAL 100 0.50% 1/16W
R89	1-218-704-11	s	METAL 3.3K 0.50% 1/16W
R90	1-218-704-11	s	METAL 3.3K 0.50% 1/16W
R91	1-216-821-11	s	METAL, CHIP 1K 5% 1/16W
R92	1-216-821-11	s	METAL, CHIP 1K 5% 1/16W
R93	1-218-668-11	s	METAL 100 0.50% 1/16W
R94	1-218-708-11	s	METAL 4.7K 0.50% 1/16W
R95	1-218-668-11	s	METAL 100 0.50% 1/16W
R96	1-218-708-11	s	METAL 4.7K 0.50% 1/16W
R97	1-218-664-11	s	METAL 68 0.50% 1/16W
R98	1-218-664-11	s	METAL 68 0.50% 1/16W
R99	1-218-704-11	s	METAL 3.3K 0.50% 1/16W
R100	1-216-821-11	s	METAL, CHIP 1K 5% 1/16W
R101	1-218-708-11	s	METAL 4.7K 0.50% 1/16W
R102	1-218-716-11	s	METAL 10K 0.50% 1/16W

(SG-190 BOARD)

Ref. No. or Q'ty	Part No.	SP	Description
R103	1-218-716-11	s	METAL 10K 0.50% 1/16W
R104	1-216-797-11	s	METAL, CHIP 10 5% 1/16W
R105	1-216-797-11	s	METAL, CHIP 10 5% 1/16W
R106	1-218-883-11	s	METAL 33K 0.50% 1/16W
R107	1-218-883-11	s	METAL 33K 0.50% 1/16W
R108	1-218-668-11	s	METAL 100 0.50% 1/16W
R109	1-218-668-11	s	METAL 100 0.50% 1/16W
R110	1-218-344-11	s	METAL 7.5K 0.50% 1/16W
R111	1-218-344-11	s	METAL 7.5K 0.50% 1/16W
R112	1-218-344-11	s	METAL 7.5K 0.50% 1/16W
R113	1-218-344-11	s	METAL 7.5K 0.50% 1/16W
R114	1-218-344-11	s	METAL 7.5K 0.50% 1/16W
R115	1-218-344-11	s	METAL 7.5K 0.50% 1/16W
R116	1-218-344-11	s	METAL 7.5K 0.50% 1/16W
R117	1-218-344-11	s	METAL 7.5K 0.50% 1/16W
R118	1-218-271-11	s	METAL 2K 0.50% 1/16W
R119	1-218-688-11	s	METAL 680 0.50% 1/16W
R120	1-216-821-11	s	METAL, CHIP 1K 5% 1/16W
R121	1-218-745-11	s	METAL 160K 0.50% 1/16W
R122	1-218-668-11	s	METAL 100 0.50% 1/16W
R123	1-218-664-11	s	METAL 68 0.50% 1/16W
R124	1-218-648-11	s	METAL 15 0.50% 1/16W
R125	1-218-648-11	s	METAL 15 0.50% 1/16W
R126	1-218-648-11	s	METAL 15 0.50% 1/16W
R127	1-218-648-11	s	METAL 15 0.50% 1/16W
R128	1-218-668-11	s	METAL 100 0.50% 1/16W
R129	1-218-668-11	s	METAL 100 0.50% 1/16W
R130	1-218-675-11	s	METAL 200 0.50% 1/16W
R131	1-218-675-11	s	METAL 200 0.50% 1/16W
R132	1-218-675-11	s	METAL 200 0.50% 1/16W
R133	1-218-272-11	s	METAL 5.1K 0.50% 1/16W
R134	1-218-272-11	s	METAL 5.1K 0.50% 1/16W
R151	1-218-668-11	s	METAL 100 0.50% 1/16W
R152	1-218-484-11	s	METAL 750 0.50% 1/16W
R153	1-216-817-11	s	METAL, CHIP 470 5% 1/16W
R154	1-216-801-11	s	METAL 22 0.50% 1/16W
R155	1-216-854-11	s	METAL, CHIP 560K 5% 1/16W
R156	1-218-748-11	s	METAL 220K 0.50% 1/16W
R157	1-218-295-11	s	METAL 5.6K 0.50% 1/16W
R158	1-216-857-11	s	METAL, CHIP 1M 5% 1/16W
R159	1-218-704-11	s	METAL 3.3K 0.50% 1/16W
R160	1-216-821-11	s	METAL, CHIP 1K 5% 1/16W
R161	1-218-716-11	s	METAL 10K 0.50% 1/16W
R162	1-216-789-11	s	METAL, CHIP 2.2 5% 1/16W
R163	1-218-748-11	s	METAL 220K 0.50% 1/16W
R164	1-216-789-11	s	METAL, CHIP 2.2 5% 1/16W
R166	1-218-716-11	s	METAL 10K 0.50% 1/16W
R167	1-218-716-11	s	METAL 10K 0.50% 1/16W
R168	1-216-821-11	s	METAL, CHIP 1K 5% 1/16W
R169	1-218-716-11	s	METAL 10K 0.50% 1/16W
R170	1-218-700-11	s	METAL 2.2K 0.50% 1/16W
R171	1-216-842-11	s	METAL, CHIP 56K 5% 1/16W
R172	1-218-707-11	s	METAL 4.3K 0.50% 1/16W
R173	1-218-707-11	s	METAL 4.3K 0.50% 1/16W
R174	1-216-842-11	s	METAL, CHIP 56K 5% 1/16W
R175	1-218-723-11	s	METAL 20K 0.50% 1/16W
R176	1-218-668-11	s	METAL 100 0.50% 1/16W
R177	1-218-723-11	s	METAL 20K 0.50% 1/16W
R178	1-218-344-11	s	METAL 7.5K 0.50% 1/16W

(SG-190 BOARD)

Ref. No. or Q'ty	Part No.	SP	Description
R179	1-216-823-11	s	METAL, CHIP 1.5K 5% 1/16W
R180	1-218-270-11	s	METAL 1.1K 0.50% 1/16W
R181	1-218-732-11	s	METAL 47K 0.50% 1/16W
R182	1-218-716-11	s	METAL 10K 0.50% 1/16W
R183	1-216-797-11	s	METAL, CHIP 10 5% 1/16W
R184	1-216-797-11	s	METAL, CHIP 10 5% 1/16W
R185	1-216-865-11	s	METAL, CHIP 3K 1/16W
R186	1-216-821-11	s	METAL, CHIP 1K 5% 1/16W
R187	1-216-795-11	s	METAL 6.8K 0.50% 1/16W
R188	1-218-675-11	s	METAL 200 0.50% 1/16W
R189	1-218-664-11	s	METAL 68 0.50% 1/16W
R190	1-218-272-11	s	METAL 5.1K 0.50% 1/16W
R191	1-218-272-11	s	METAL 5.1K 0.50% 1/16W
R192	1-218-664-11	s	METAL 68 0.50% 1/16W
R193	1-218-716-11	s	METAL 10K 0.50% 1/16W
R194	1-218-675-11	s	METAL 200 0.50% 1/16W
R195	1-218-700-11	s	METAL 2.2K 0.50% 1/16W
R196	1-218-313-11	s	METAL, CHIP 560 1% 1/16W
R197	1-218-285-11	s	METAL, CHIP 75 5% 1/16W
R198	1-218-646-11	s	METAL 12 0.50% 1/16W
R199	1-218-716-11	s	METAL 10K 0.50% 1/16W
R200	1-218-740-11	s	METAL 100K 0.50% 1/16W
R201	1-218-724-11	s	METAL 22K 0.50% 1/16W
R202	1-218-883-11	s	METAL 33K 0.50% 1/16W
R203	1-218-883-11	s	METAL 33K 0.50% 1/16W
R204	1-218-664-11	s	METAL 68 0.50% 1/16W
R205	1-218-664-11	s	METAL 68 0.50% 1/16W
R206	1-218-664-11	s	METAL 68 0.50% 1/16W
R207	1-218-664-11	s	METAL 68 0.50% 1/16W
R208	1-216-821-11	s	METAL, CHIP 1K 5% 1/16W
R209	1-218-675-11	s	METAL 200 0.50% 1/16W
R401	1-216-864-11	s	METAL, CHIP 0-OHM
R402	1-216-864-11	s	METAL, CHIP 0-OHM
R403	1-216-864-11	s	METAL, CHIP 0-OHM
R404	1-216-864-11	s	METAL, CHIP 0-OHM
RV1	1-237-035-11	s	RES, ADJ, METAL 5K
RV2	1-228-474-00	s	RES, ADJ, METAL 10K
RV3	1-237-036-11	s	RES, ADJ, METAL 10K
RV11	1-237-036-11	s	RES, ADJ, METAL 10K
RV12	1-237-036-11	s	RES, ADJ, METAL 10K
RV13	1-237-036-11	s	RES, ADJ, METAL 10K
RV14	1-237-036-11	s	RES, ADJ, METAL 10K
RV15	1-237-037-11	s	RES, ADJ, METAL 20K
S11	1-570-839-11	s	SWITCH, SLIDE
X1	1-577-331-11	s	OSCILLATOR, CRYSTAL 74.25MHz

SW-498 BOARD

Ref. No. or Q'ty	Part No.	SP	Description
1pc	A-8271-403-A	o	MOUNTED CIRCUIT BOARD, SW-498
2pcs	7-627-553-47	s	SCREW,PRECISION +P 2X4
C1	1-135-216-11	s	TANTALUM, CHIP 10uF 20% 10V
CN498	1-580-558-11	o	PIN, CONNECTOR (PC BOARD) 6P
D1	8-719-974-44	s	LED PG4553KY, GRN
D2	8-719-974-44	s	LED PG4553KY, GRN
D3	8-719-974-44	s	LED PG4553KY, GRN
D4	8-719-974-44	s	LED PG4553KY, GRN
D5	8-719-974-44	s	LED PG4553KY, GRN
D6	8-719-023-51	s	DIODE MU03-2201
IC1	8-759-990-63	s	IC PCF8574AT
IC2	8-759-009-05	s	IC MC14051BF
Q1	8-729-907-00	s	TRANSISTOR DTC114EU
Q2	8-729-907-00	s	TRANSISTOR DTC114EU
Q3	8-729-907-00	s	TRANSISTOR DTC114EU
Q4	8-729-907-00	s	TRANSISTOR DTC114EU
Q5	8-729-907-00	s	TRANSISTOR DTC114EU
Q6	8-729-920-99	s	TRANSISTOR DTA114EU
R1	1-218-740-11	s	METAL 100K 0.50% 1/16W
R2	1-218-740-11	s	METAL 100K 0.50% 1/16W
R3	1-216-797-11	s	METAL, CHIP 10 5% 1/16W
R4	1-216-797-11	s	METAL, CHIP 10 5% 1/16W
R5	1-218-676-11	s	METAL 220 0.50% 1/16W
R6	1-218-676-11	s	METAL 220 0.50% 1/16W
R7	1-218-676-11	s	METAL 220 0.50% 1/16W
R8	1-218-676-11	s	METAL 220 0.50% 1/16W
S1	1-570-472-11	s	SWITCH, KEY BOARD
S2	1-570-472-11	s	SWITCH, KEY BOARD
S3	1-570-472-11	s	SWITCH, KEY BOARD
S4	1-570-472-11	s	SWITCH, KEY BOARD
S5	1-570-472-11	s	SWITCH, KEY BOARD

VDA-18 BOARD

Ref. No. or Q'ty	Part No.	SP	Description
1pc	A-8271-413-A	o	MOUNTED CIRCUIT BOARD, VDA-18
2pcs	7-621-772-18	s	SCREW +B 2X4
2pcs	7-627-553-68	s	SCREW, PRECISION +P 2X6
C1	1-135-159-21	s	TANTALUM, CHIP 10uF 10% 20V
C2	1-164-156-11	s	CERAMIC 0.1uF 25V0%
C3	1-164-156-11	s	CERAMIC 0.1uF 25V0%
C4	1-162-927-11	s	CERAMIC, CHIP 100PF 5% 50V
C5	1-162-905-11	s	CERAMIC 1PF 0.25PF 50V
C6	1-164-156-11	s	CERAMIC 0.1uF 25V0%
C7	1-135-159-21	s	TANTALUM, CHIP 10uF 10% 20V
C8	1-164-156-11	s	CERAMIC 0.1uF 25V0%
C9	1-135-177-21	s	TANTALUM, CHIP 1uF 10% 25V
C11	1-135-076-21	s	TANTALUM, CHIP 1uF 10% 35V
C12	1-164-156-11	s	CERAMIC 0.1uF 25V0%
C13	1-162-915-11	s	CERAMIC, CHIP 10PF 5PF 50V
C14	1-164-156-11	s	CERAMIC 0.1uF 25V0%
C15	1-164-156-11	s	CERAMIC 0.1uF 25V0%
C17	1-162-927-11	s	CERAMIC, CHIP 100PF 5% 50V
C18	1-135-159-21	s	TANTALUM, CHIP 10uF 10% 20V
C19	1-164-156-11	s	CERAMIC 0.1uF 25V0%
C20	1-164-156-11	s	CERAMIC 0.1uF 25V0%
C21	1-162-908-11	s	CERAMIC 3PF 0.25PF 50V
C22	1-162-927-11	s	CERAMIC, CHIP 100PF 5% 50V
C23	1-135-159-21	s	TANTALUM, CHIP 10uF 10% 20V
C24	1-164-156-11	s	CERAMIC 0.1uF 25V0%
C25	1-164-156-11	s	CERAMIC 0.1uF 25V0%
C27	1-162-927-11	s	CERAMIC, CHIP 100PF 5% 50V
C28	1-135-159-21	s	TANTALUM, CHIP 10uF 10% 20V
C29	1-162-915-11	s	CERAMIC, CHIP 10PF 5PF 50V
C30	1-162-915-11	s	CERAMIC, CHIP 10PF 5PF 50V
C31	1-164-156-11	s	CERAMIC 0.1uF 25V0%
C32	1-135-149-21	s	TANTALUM, CHIP 2.2uF 10% 10V
C33	1-135-155-21	s	TANTALUM, CHIP 4.7uF 10% 16V
C34	1-135-149-21	s	TANTALUM, CHIP 2.2uF 10% 10V
C35	1-135-155-21	s	TANTALUM, CHIP 4.7uF 10% 16V
C36	1-162-915-11	s	CERAMIC, CHIP 10PF 5PF 50V
C39	1-164-156-11	s	CERAMIC 0.1uF 25V0%
C40	1-164-156-11	s	CERAMIC 0.1uF 25V0%
C41	1-162-905-11	s	CERAMIC 1PF 0.25PF 50V
C42	1-162-927-11	s	CERAMIC, CHIP 100PF 5% 50V
C201	1-135-159-21	s	TANTALUM, CHIP 10uF 10% 20V
C202	1-164-156-11	s	CERAMIC 0.1uF 25V0%
C203	1-164-156-11	s	CERAMIC 0.1uF 25V0%
C204	1-162-927-11	s	CERAMIC, CHIP 100PF 5% 50V
C205	1-162-905-11	s	CERAMIC 1PF 0.25PF 50V
C206	1-135-159-21	s	TANTALUM, CHIP 10uF 10% 20V
C207	1-164-156-11	s	CERAMIC 0.1uF 25V0%
C208	1-164-156-11	s	CERAMIC 0.1uF 25V0%
C209	1-164-156-11	s	CERAMIC 0.1uF 25V0%
C210	1-135-177-21	s	TANTALUM, CHIP 1uF 10% 25V
C212	1-135-076-21	s	TANTALUM, CHIP 1uF 10% 35V
C213	1-164-156-11	s	CERAMIC 0.1uF 25V0%
C214	1-162-915-11	s	CERAMIC, CHIP 10PF 5PF 50V
C215	1-164-156-11	s	CERAMIC 0.1uF 25V0%
C216	1-164-156-11	s	CERAMIC 0.1uF 25V0%
C218	1-162-927-11	s	CERAMIC, CHIP 100PF 5% 50V
C219	1-135-159-21	s	TANTALUM, CHIP 10uF 10% 20V
C220	1-135-159-21	s	TANTALUM, CHIP 10uF 10% 20V

(VDA-18 BOARD)

Ref. No. or Q'ty	Part No.	SP	Description
C221	1-164-156-11	s	CERAMIC 0.1uF 25V0%
C222	1-164-156-11	s	CERAMIC 0.1uF 25V0%
C223	1-162-907-11	s	CERAMIC, CHIP 2PF 50V
C224	1-162-927-11	s	CERAMIC, CHIP 100PF 5% 50V
C225	1-135-159-21	s	TANTALUM, CHIP 10uF 10% 20V
C226	1-164-156-11	s	CERAMIC 0.1uF 25V0%
C227	1-164-156-11	s	CERAMIC 0.1uF 25V0%
C229	1-162-927-11	s	CERAMIC, CHIP 100PF 5% 50V
C230	1-135-159-21	s	TANTALUM, CHIP 10uF 10% 20V
C231	1-162-915-11	s	CERAMIC, CHIP 10PF 5PF 50V
C232	1-162-915-11	s	CERAMIC, CHIP 10PF 5PF 50V
C233	1-164-156-11	s	CERAMIC 0.1uF 25V0%
C234	1-135-155-21	s	TANTALUM, CHIP 4.7uF 10% 16V
C235	1-135-155-21	s	TANTALUM, CHIP 4.7uF 10% 16V
C236	1-162-915-11	s	CERAMIC, CHIP 10PF 5PF 50V
C239	1-164-156-11	s	CERAMIC 0.1uF 25V0%
C240	1-164-156-11	s	CERAMIC 0.1uF 25V0%
C241	1-162-905-11	s	CERAMIC 1PF 0.25PF 50V
C242	1-162-927-11	s	CERAMIC, CHIP 100PF 5% 50V
C401	1-135-159-21	s	TANTALUM, CHIP 10uF 10% 20V
C402	1-164-156-11	s	CERAMIC 0.1uF 25V0%
C403	1-164-156-11	s	CERAMIC 0.1uF 25V0%
C404	1-162-927-11	s	CERAMIC, CHIP 100PF 5% 50V
C405	1-162-905-11	s	CERAMIC 1PF 0.25PF 50V
C406	1-164-156-11	s	CERAMIC 0.1uF 25V0%
C407	1-135-159-21	s	TANTALUM, CHIP 10uF 10% 20V
C408	1-164-156-11	s	CERAMIC 0.1uF 25V0%
C409	1-135-177-21	s	TANTALUM, CHIP 1uF 10% 25V
C411	1-135-076-21	s	TANTALUM, CHIP 1uF 10% 35V
C412	1-164-156-11	s	CERAMIC 0.1uF 25V0%
C413	1-162-915-11	s	CERAMIC, CHIP 10PF 5PF 50V
C414	1-164-156-11	s	CERAMIC 0.1uF 25V0%
C415	1-164-156-11	s	CERAMIC 0.1uF 25V0%
C417	1-162-927-11	s	CERAMIC, CHIP 100PF 5% 50V
C418	1-135-159-21	s	TANTALUM, CHIP 10uF 10% 20V
C419	1-135-159-21	s	TANTALUM, CHIP 10uF 10% 20V
C420	1-164-156-11	s	CERAMIC 0.1uF 25V0%
C421	1-164-156-11	s	CERAMIC 0.1uF 25V0%
C422	1-162-908-11	s	CERAMIC 3PF 0.25PF 50V
C423	1-162-927-11	s	CERAMIC, CHIP 100PF 5% 50V
C424	1-135-159-21	s	TANTALUM, CHIP 10uF 10% 20V
C425	1-164-156-11	s	CERAMIC 0.1uF 25V0%
C426	1-164-156-11	s	CERAMIC 0.1uF 25V0%
C428	1-162-927-11	s	CERAMIC, CHIP 100PF 5% 50V
C429	1-135-159-21	s	TANTALUM, CHIP 10uF 10% 20V
C430	1-162-915-11	s	CERAMIC, CHIP 10PF 5PF 50V
C431	1-164-156-11	s	CERAMIC 0.1uF 25V0%
C432	1-162-915-11	s	CERAMIC, CHIP 10PF 5PF 50V
C433	1-164-156-11	s	CERAMIC 0.1uF 25V0%
C434	1-135-155-21	s	TANTALUM, CHIP 4.7uF 10% 16V
C435	1-164-156-11	s	CERAMIC 0.1uF 25V0%
C436	1-164-156-11	s	CERAMIC 0.1uF 25V0%
C437	1-135-155-21	s	TANTALUM, CHIP 4.7uF 10% 16V
C438	1-162-915-11	s	CERAMIC, CHIP 10PF 5PF 50V
C439	1-164-156-11	s	CERAMIC 0.1uF 25V0%
C440	1-164-156-11	s	CERAMIC 0.1uF 25V0%
C441	1-162-905-11	s	CERAMIC 1PF 0.25PF 50V
C442	1-162-927-11	s	CERAMIC, CHIP 100PF 5% 50V
C443	1-126-396-11	s	ELECT, CHIP 47uF 20% 16V

(VDA-18 BOARD)

Ref. No. or Q'ty	Part No.	SP	Description
C444	1-126-396-11	s	ELECT, CHIP 47uF 20% 16V
C601	1-164-156-11	s	CERAMIC 0.1uF 25V0%
C602	1-164-156-11	s	CERAMIC 0.1uF 25V0%
C603	1-162-927-11	s	CERAMIC, CHIP 100PF 5% 50V
C604	1-135-161-21	s	TANTALUM, CHIP 22uF 10% 10V
C605	1-162-965-11	s	CERAMIC 0.0015uF 10% 50V
C607	1-164-156-11	s	CERAMIC 0.1uF 25V0%
C608	1-164-156-11	s	CERAMIC 0.1uF 25V0%
C609	1-162-927-11	s	CERAMIC, CHIP 100PF 5% 50V
C610	1-135-159-21	s	TANTALUM, CHIP 10uF 10% 20V
C611	1-135-159-21	s	TANTALUM, CHIP 10uF 10% 20V
C612	1-135-159-21	s	TANTALUM, CHIP 10uF 10% 20V
C613	1-135-159-21	s	TANTALUM, CHIP 10uF 10% 20V
C614	1-126-392-11	s	ELECT, CHIP 100uF 20% 6.3V
C615	1-126-392-11	s	ELECT, CHIP 100uF 20% 6.3V
C616	1-164-156-11	s	CERAMIC 0.1uF 25V0%
C617	1-164-156-11	s	CERAMIC 0.1uF 25V0%
C618	1-164-156-11	s	CERAMIC 0.1uF 25V0%
C619	1-162-923-11	s	CERAMIC, CHIP 47PF 5% 50V
C620	1-135-091-00	s	TANTALUN, CHIP 1uF 10% 16V
C621	1-164-156-11	s	CERAMIC 0.1uF 25V0%
C622	1-164-156-11	s	CERAMIC 0.1uF 25V0%
C623	1-164-156-11	s	CERAMIC 0.1uF 25V0%
C624	1-162-923-11	s	CERAMIC, CHIP 47PF 5% 50V
C625	1-162-923-11	s	CERAMIC, CHIP 47PF 5% 50V
C626	1-162-923-11	s	CERAMIC, CHIP 47PF 5% 50V
C627	1-164-156-11	s	CERAMIC 0.1uF 25V0%
C628	1-164-156-11	s	CERAMIC 0.1uF 25V0%
C629	1-164-156-11	s	CERAMIC 0.1uF 25V0%
C630	1-164-156-11	s	CERAMIC 0.1uF 25V0%
C631	1-164-156-11	s	CERAMIC 0.1uF 25V0%
C632	1-164-156-11	s	CERAMIC 0.1uF 25V0%
C633	1-126-392-11	s	ELECT, CHIP 100uF 20% 6.3V
C634	1-126-392-11	s	ELECT, CHIP 100uF 20% 6.3V
C635	1-162-927-11	s	CERAMIC, CHIP 100PF 5% 50V
C636	1-162-927-11	s	CERAMIC, CHIP 100PF 5% 50V
C637	1-164-156-11	s	CERAMIC 0.1uF 25V0%
C638	1-162-923-11	s	CERAMIC, CHIP 47PF 5% 50V
C639	1-162-923-11	s	CERAMIC, CHIP 47PF 5% 50V
C640	1-164-156-11	s	CERAMIC 0.1uF 25V0%
C641	1-164-156-11	s	CERAMIC 0.1uF 25V0%
C642	1-162-927-11	s	CERAMIC, CHIP 100PF 5% 50V
C643	1-162-905-11	s	CERAMIC 1PF 0.25PF 50V
C644	1-164-156-11	s	CERAMIC 0.1uF 25V0%
C645	1-164-156-11	s	CERAMIC 0.1uF 25V0%
C646	1-164-156-11	s	CERAMIC 0.1uF 25V0%
C647	1-164-156-11	s	CERAMIC 0.1uF 25V0%
C648	1-162-905-11	s	CERAMIC 1PF 0.25PF 50V
C649	1-162-927-11	s	CERAMIC, CHIP 100PF 5% 50V
C650	1-162-910-11	s	CERAMIC 5PF 0.25PF 50V
C651	1-164-156-11	s	CERAMIC 0.1uF 25V0%
C652	1-164-156-11	s	CERAMIC 0.1uF 25V0%
C653	1-135-177-21	s	TANTALUM, CHIP 1uF 10% 25V
C654	1-135-177-21	s	TANTALUM, CHIP 1uF 10% 25V
C655	1-162-915-11	s	CERAMIC, CHIP 10PF 5PF 50V
C680	1-164-156-11	s	CERAMIC 0.1uF 25V0%
CN1	1-691-847-11	s	CONNECTOR, BOARD TO BOARD 50P

(VDA-18 BOARD)

Ref. No. or Q'ty	Part No.	SP	Description
D601	8-719-800-76	s	DIODE 1SS226
D602	8-719-421-15	s	DIODE MA8027-L
D603	8-719-421-15	s	DIODE MA8027-L
D604	8-719-421-27	s	DIODE MA728
DL1	1-415-873-11	s	DELAY LINE, PULSE
DL401	1-415-873-11	s	DELAY LINE, PULSE
FL1	1-239-297-11	s	FILTER, LOW PASS
FL201	1-239-297-11	s	FILTER, LOW PASS
FL401	1-239-297-11	s	FILTER, LOW PASS
FL601	1-239-332-11	s	FILTER, LOW PASS (SYNC)
IC1	8-759-038-46	s	IC SC7S00F
IC2	8-759-234-20	s	IC TC7S08F
IC3	8-759-054-61	s	IC CLC505AJE
IC4	8-752-052-77	s	IC CXA1450M
IC5	8-759-054-61	s	IC CLC505AJE
IC6	8-759-054-61	s	IC CLC505AJE
IC7	8-752-052-77	s	IC CXA1450M
IC8	8-759-054-61	s	IC CLC505AJE
IC9	8-759-230-99	s	IC TC74HC4053AF
IC10	8-759-142-19	s	IC UPC4064G
IC11	8-759-230-99	s	IC TC74HC4053AF
IC12	8-759-054-61	s	IC CLC505AJE
IC201	8-759-234-20	s	IC TC7S08F
IC202	8-759-054-61	s	IC CLC505AJE
IC203	8-759-142-20	s	IC UPC4062G2
IC204	8-752-052-77	s	IC CXA1450M
IC205	8-759-054-61	s	IC CLC505AJE
IC206	8-759-054-61	s	IC CLC505AJE
IC207	8-752-052-77	s	IC CXA1450M
IC208	8-759-054-61	s	IC CLC505AJE
IC212	8-759-054-61	s	IC CLC505AJE
IC401	8-759-234-20	s	IC TC7S08F
IC402	8-759-054-61	s	IC CLC505AJE
IC403	8-752-052-77	s	IC CXA1450M
IC404	8-759-054-61	s	IC CLC505AJE
IC405	8-759-054-61	s	IC CLC505AJE
IC406	8-752-052-77	s	IC CXA1450M
IC407	8-759-054-61	s	IC CLC505AJE
IC412	8-759-054-61	s	IC CLC505AJE
IC601	8-759-242-64	s	IC TC4W53F
IC602	8-759-230-98	s	IC TC74HC4052AF
IC603	8-759-054-61	s	IC CLC505AJE
IC604	8-759-054-61	s	IC CLC505AJE
IC605	8-752-052-82	s	IC CXA1432M
IC606	8-752-052-73	s	IC CXA1451M
IC607	8-759-054-63	s	IC TLC339CNS
IC608	8-759-142-20	s	IC UPC4062G2
IC609	8-759-066-68	s	IC REF-03GS
IC610	8-759-031-84	s	IC SC7S04F
IC611	8-759-035-93	s	IC TC7S32F
IC612	8-759-054-61	s	IC CLC505AJE
IC613	8-759-054-61	s	IC CLC505AJE
IC614	8-759-990-61	s	IC PCF8574T
IC615	8-759-990-61	s	IC PCF8574T
IC616	8-759-035-93	s	IC TC7S32F
IC617	8-759-035-90	s	IC SC7S02F
IC618	8-759-035-90	s	IC SC7S02F
IC619	8-759-035-90	s	IC SC7S02F

(VDA-18 BOARD)

Ref. No. or Q'ty	Part No.	SP	Description
L601	1-410-711-31	s	INDUCTOR, CHIP 33uH
Q1	8-729-143-07	s	TRANSISTOR 2SA1610-Y33
Q2	8-729-143-07	s	TRANSISTOR 2SA1610-Y33
Q3	8-729-143-07	s	TRANSISTOR 2SA1610-Y33
Q4	8-729-143-14	s	TRANSISTOR 2SC4176-B35
Q5	8-729-117-16	s	TRANSISTOR 2SA1611-M6
Q6	8-729-143-14	s	TRANSISTOR 2SC4176-B35
Q7	8-729-117-16	s	TRANSISTOR 2SA1611-M6
Q8	8-729-143-14	s	TRANSISTOR 2SC4176-B35
Q9	8-729-143-07	s	TRANSISTOR 2SA1610-Y33
Q10	8-729-143-07	s	TRANSISTOR 2SA1610-Y33
Q11	8-729-143-14	s	TRANSISTOR 2SC4176-B35
Q12	8-729-143-07	s	TRANSISTOR 2SA1610-Y33
Q13	8-729-143-14	s	TRANSISTOR 2SC4176-B35
Q14	8-729-143-07	s	TRANSISTOR 2SA1610-Y33
Q16	8-729-143-14	s	TRANSISTOR 2SC4176-B35
Q201	8-729-143-07	s	TRANSISTOR 2SA1610-Y33
Q202	8-729-143-07	s	TRANSISTOR 2SA1610-Y33
Q203	8-729-143-07	s	TRANSISTOR 2SA1610-Y33
Q204	8-729-143-14	s	TRANSISTOR 2SC4176-B35
Q205	8-729-920-99	s	TRANSISTOR DTA114EU
Q206	8-729-117-16	s	TRANSISTOR 2SA1611-M6
Q207	8-729-143-14	s	TRANSISTOR 2SC4176-B35
Q208	8-729-117-16	s	TRANSISTOR 2SA1611-M6
Q209	8-729-143-14	s	TRANSISTOR 2SC4176-B35
Q210	8-729-143-07	s	TRANSISTOR 2SA1610-Y33
Q211	8-729-143-07	s	TRANSISTOR 2SA1610-Y33
Q212	8-729-143-14	s	TRANSISTOR 2SC4176-B35
Q213	8-729-143-07	s	TRANSISTOR 2SA1610-Y33
Q214	8-729-143-14	s	TRANSISTOR 2SC4176-B35
Q215	8-729-143-07	s	TRANSISTOR 2SA1610-Y33
Q216	8-729-143-14	s	TRANSISTOR 2SC4176-B35
Q401	8-729-143-07	s	TRANSISTOR 2SA1610-Y33
Q402	8-729-143-07	s	TRANSISTOR 2SA1610-Y33
Q403	8-729-143-07	s	TRANSISTOR 2SA1610-Y33
Q404	8-729-143-14	s	TRANSISTOR 2SC4176-B35
Q405	8-729-117-16	s	TRANSISTOR 2SA1611-M6
Q406	8-729-143-14	s	TRANSISTOR 2SC4176-B35
Q407	8-729-117-16	s	TRANSISTOR 2SA1611-M6
Q408	8-729-143-14	s	TRANSISTOR 2SC4176-B35
Q409	8-729-143-07	s	TRANSISTOR 2SA1610-Y33
Q410	8-729-143-07	s	TRANSISTOR 2SA1610-Y33
Q411	8-729-143-14	s	TRANSISTOR 2SC4176-B35
Q412	8-729-143-07	s	TRANSISTOR 2SA1610-Y33
Q413	8-729-143-14	s	TRANSISTOR 2SC4176-B35
Q414	8-729-143-07	s	TRANSISTOR 2SA1610-Y33
Q415	8-729-807-16	s	TRANSISTOR 2SD1621-R
Q416	8-729-143-14	s	TRANSISTOR 2SC4176-B35
Q601	8-729-143-14	s	TRANSISTOR 2SC4176-B35
Q602	8-729-143-07	s	TRANSISTOR 2SA1610-Y33
Q603	8-729-143-07	s	TRANSISTOR 2SA1610-Y33
Q604	8-729-143-07	s	TRANSISTOR 2SA1610-Y33
Q605	8-729-143-14	s	TRANSISTOR 2SC4176-B35
Q606	8-729-143-14	s	TRANSISTOR 2SC4176-B35
Q607	8-729-143-14	s	TRANSISTOR 2SC4176-B35
Q608	8-729-143-07	s	TRANSISTOR 2SA1610-Y33
Q609	8-729-143-14	s	TRANSISTOR 2SC4176-B35
Q610	8-729-143-07	s	TRANSISTOR 2SA1610-Y33

(VDA-18 BOARD)

Ref. No. or Q'ty	Part No.	SP	Description
Q611	8-729-143-07	s	TRANSISTOR 2SA1610-Y33
Q612	8-729-143-07	s	TRANSISTOR 2SA1610-Y33
Q613	8-729-143-14	s	TRANSISTOR 2SC4176-B35
Q614	8-729-143-07	s	TRANSISTOR 2SA1610-Y33
Q615	8-729-143-14	s	TRANSISTOR 2SC4176-B35
Q616	8-769-401-67	s	TRANSISTOR 3SK163-1
Q617	8-729-143-07	s	TRANSISTOR 2SA1610-Y33
Q618	8-729-143-07	s	TRANSISTOR 2SA1610-Y33
Q619	8-729-143-07	s	TRANSISTOR 2SA1610-Y33
Q620	8-729-143-07	s	TRANSISTOR 2SA1610-Y33
Q621	8-729-805-25	s	TRANSISTOR 2SB1121-S
Q622	8-729-117-32	s	TRANSISTOR 2SC4177
Q623	8-729-117-16	s	TRANSISTOR 2SA1611-M6
Q624	8-729-807-16	s	TRANSISTOR 2SD1621-R
Q625	8-729-143-07	s	TRANSISTOR 2SA1610-Y33
Q626	8-729-143-14	s	TRANSISTOR 2SC4176-B35
Q627	8-729-143-14	s	TRANSISTOR 2SC4176-B35
Q628	8-729-143-07	s	TRANSISTOR 2SA1610-Y33
Q629	8-729-143-14	s	TRANSISTOR 2SC4176-B35
Q630	8-729-143-14	s	TRANSISTOR 2SC4176-B35
Q631	8-729-143-14	s	TRANSISTOR 2SC4176-B35
Q632	8-729-143-14	s	TRANSISTOR 2SC4176-B35
Q633	8-729-143-14	s	TRANSISTOR 2SC4176-B35
Q634	8-769-401-67	s	TRANSISTOR 3SK163-1
R1	1-218-883-11	s	METAL 33K 0.50% 1/16W
R2	1-218-883-11	s	METAL 33K 0.50% 1/16W
R3	1-218-664-11	s	METAL 68 0.50% 1/16W
R4	1-218-716-11	s	METAL 10K 0.50% 1/16W
R5	1-218-289-11	s	METAL, CHIP 510 5% 1/16W
R6	1-218-745-11	s	METAL 160K 0.50% 1/16W
R7	1-216-821-11	s	METAL, CHIP 1K 5% 1/16W
R8	1-218-668-11	s	METAL 100 0.50% 1/16W
R9	1-216-822-11	s	METAL, CHIP 1.2K 5% 1/16W
R10	1-218-668-11	s	METAL 100 0.50% 1/16W
R11	1-218-732-11	s	METAL 47K 0.50% 1/16W
R12	1-216-821-11	s	METAL, CHIP 1K 5% 1/16W
R13	1-216-864-11	s	METAL, CHIP 0-OHM
R14	1-218-724-11	s	METAL 22K 0.50% 1/16W
R15	1-218-724-11	s	METAL 22K 0.50% 1/16W
R16	1-218-269-11	s	METAL, CHIP 360 5% 1/16W
R17	1-216-823-11	s	METAL, CHIP 1.5K 5% 1/16W
R18	1-216-816-11	s	METAL, CHIP 390 5% 1/16W
R19	1-216-823-11	s	METAL, CHIP 1.5K 5% 1/16W
R20	1-218-269-11	s	METAL, CHIP 360 5% 1/16W
R21	1-216-822-11	s	METAL, CHIP 1.2K 5% 1/16W
R24	1-218-740-11	s	METAL 100K 0.50% 1/16W
R25	1-218-700-11	s	METAL 2.2K 0.50% 1/16W
R26	1-218-668-11	s	METAL 100 0.50% 1/16W
R27	1-218-700-11	s	METAL 2.2K 0.50% 1/16W
R28	1-218-668-11	s	METAL 100 0.50% 1/16W
R29	1-218-313-11	s	METAL, CHIP 560 1% 1/16W
R30	1-218-704-11	s	METAL 3.3K 0.50% 1/16W
R31	1-218-288-11	s	METAL, CHIP 300 5% 1/16W
R32	1-218-706-11	s	METAL 3.9K 0.50% 1/16W
R33	1-218-289-11	s	METAL, CHIP 510 5% 1/16W
R34	1-216-821-11	s	METAL, CHIP 1K 5% 1/16W
R35	1-216-821-11	s	METAL, CHIP 1K 5% 1/16W
R36	1-218-745-11	s	METAL 160K 0.50% 1/16W
R37	1-218-664-11	s	METAL 68 0.50% 1/16W

(VDA-18 BOARD)

Ref. No. or Q'ty	Part No.	SP	Description
R38	1-218-288-11	s	METAL, CHIP 300 5% 1/16W
R39	1-216-817-11	s	METAL, CHIP 470 5% 1/16W
R40	1-216-820-11	s	METAL, CHIP 820 5% 1/16W
R41	1-216-823-11	s	METAL, CHIP 1.5K 5% 1/16W
R42	1-218-457-11	s	METAL 910 0.50% 1/16W
R43	1-218-745-11	s	METAL 160K 0.50% 1/16W
R44	1-218-664-11	s	METAL 68 0.50% 1/16W
R45	1-218-883-11	s	METAL 33K 0.50% 1/16W
R46	1-218-688-11	s	METAL 680 0.50% 1/16W
R47	1-218-680-11	s	METAL 330 0.50% 1/16W
R48	1-218-695-11	s	METAL 1.3K 0.50% 1/16W
R49	1-218-651-11	s	METAL 20 0.50% 1/16W
R50	1-216-822-11	s	METAL, CHIP 1.2K 5% 1/16W
R51	1-218-745-11	s	METAL 160K 0.50% 1/16W
R52	1-216-821-11	s	METAL, CHIP 1K 5% 1/16W
R53	1-218-664-11	s	METAL 68 0.50% 1/16W
R54	1-218-285-11	s	METAL, CHIP 75 5% 1/16W
R55	1-218-668-11	s	METAL 100 0.50% 1/16W
R56	1-218-708-11	s	METAL 4.7K 0.50% 1/16W
R57	1-216-821-11	s	METAL, CHIP 1K 5% 1/16W
R58	1-218-716-11	s	METAL 10K 0.50% 1/16W
R59	1-216-793-11	s	METAL 4.7 5% 1/16W
R60	1-218-668-11	s	METAL 100 0.50% 1/16W
R61	1-218-695-11	s	METAL 1.3K 0.50% 1/16W
R62	1-218-272-11	s	METAL 5.1K 0.50% 1/16W
R63	1-218-716-11	s	METAL 10K 0.50% 1/16W
R64	1-218-664-11	s	METAL 68 0.50% 1/16W
R65	1-218-285-11	s	METAL, CHIP 75 5% 1/16W
R66	1-218-716-11	s	METAL 10K 0.50% 1/16W
R79	1-216-821-11	s	METAL, CHIP 1K 5% 1/16W
R80	1-218-668-11	s	METAL 100 0.50% 1/16W
R81	1-216-821-11	s	METAL, CHIP 1K 5% 1/16W
R82	1-218-745-11	s	METAL 160K 0.50% 1/16W
R83	1-218-680-11	s	METAL 330 0.50% 1/16W
R84	1-218-668-11	s	METAL 100 0.50% 1/16W
R85	1-218-704-11	s	METAL 3.3K 0.50% 1/16W
R201	1-218-883-11	s	METAL 33K 0.50% 1/16W
R202	1-218-664-11	s	METAL 68 0.50% 1/16W
R203	1-218-716-11	s	METAL 10K 0.50% 1/16W
R204	1-218-289-11	s	METAL, CHIP 510 5% 1/16W
R205	1-218-745-11	s	METAL 160K 0.50% 1/16W
R206	1-216-821-11	s	METAL, CHIP 1K 5% 1/16W
R207	1-218-668-11	s	METAL 100 0.50% 1/16W
R208	1-216-822-11	s	METAL, CHIP 1.2K 5% 1/16W
R209	1-218-668-11	s	METAL 100 0.50% 1/16W
R210	1-216-821-11	s	METAL, CHIP 1K 5% 1/16W
R211	1-218-272-11	s	METAL 5.1K 0.50% 1/16W
R213	1-218-883-11	s	METAL 33K 0.50% 1/16W
R214	1-216-838-11	s	METAL, CHIP 27K 5% 1/16W
R215	1-216-838-11	s	METAL, CHIP 27K 5% 1/16W
R217	1-218-724-11	s	METAL 22K 0.50% 1/16W
R218	1-218-732-11	s	METAL 47K 0.50% 1/16W
R219	1-218-295-11	s	METAL 5.6K 0.50% 1/16W
R220	1-218-706-11	s	METAL 3.9K 0.50% 1/16W
R221	1-216-864-11	s	METAL, CHIP 0-OHM
R222	1-218-269-11	s	METAL, CHIP 360 5% 1/16W
R223	1-216-823-11	s	METAL, CHIP 1.5K 5% 1/16W
R224	1-218-724-11	s	METAL 22K 0.50% 1/16W
R225	1-218-724-11	s	METAL 22K 0.50% 1/16W

(VDA-18 BOARD)

Ref. No. or Q'ty	Part No.	SP	Description
R226	1-216-823-11	s	METAL, CHIP 1.5K 5% 1/16W
R227	1-218-269-11	s	METAL, CHIP 360 5% 1/16W
R228	1-216-816-11	s	METAL, CHIP 390 5% 1/16W
R229	1-216-822-11	s	METAL, CHIP 1.2K 5% 1/16W
R232	1-218-668-11	s	METAL 100 0.50% 1/16W
R233	1-218-740-11	s	METAL 100K 0.50% 1/16W
R234	1-218-700-11	s	METAL 2.2K 0.50% 1/16W
R235	1-218-700-11	s	METAL 2.2K 0.50% 1/16W
R236	1-218-668-11	s	METAL 100 0.50% 1/16W
R237	1-218-313-11	s	METAL, CHIP 560 1% 1/16W
R238	1-218-704-11	s	METAL 3.3K 0.50% 1/16W
R239	1-218-288-11	s	METAL, CHIP 300 5% 1/16W
R240	1-218-706-11	s	METAL 3.9K 0.50% 1/16W
R241	1-218-289-11	s	METAL, CHIP 510 5% 1/16W
R242	1-216-821-11	s	METAL, CHIP 1K 5% 1/16W
R243	1-216-821-11	s	METAL, CHIP 1K 5% 1/16W
R244	1-218-745-11	s	METAL 160K 0.50% 1/16W
R245	1-218-664-11	s	METAL 68 0.50% 1/16W
R246	1-218-707-11	s	METAL 4.3K 0.50% 1/16W
R247	1-216-822-11	s	METAL, CHIP 1.2K 5% 1/16W
R248	1-218-330-11	s	METAL 11K 0.50% 1/16W
R249	1-216-816-11	s	METAL, CHIP 390 5% 1/16W
R250	1-218-675-11	s	METAL 200 0.50% 1/16W
R251	1-216-817-11	s	METAL, CHIP 470 5% 1/16W
R252	1-216-802-11	s	METAL 27 0.50% 1/16W
R253	1-216-802-11	s	METAL 27 0.50% 1/16W
R254	1-218-653-11	s	METAL 24 0.50% 1/16W
R255	1-218-457-11	s	METAL 910 0.50% 1/16W
R256	1-218-745-11	s	METAL 160K 0.50% 1/16W
R257	1-218-664-11	s	METAL 68 0.50% 1/16W
R258	1-218-688-11	s	METAL 680 0.50% 1/16W
R259	1-218-680-11	s	METAL 330 0.50% 1/16W
R260	1-218-695-11	s	METAL 1.3K 0.50% 1/16W
R261	1-218-651-11	s	METAL 20 0.50% 1/16W
R262	1-216-822-11	s	METAL, CHIP 1.2K 5% 1/16W
R263	1-218-745-11	s	METAL 160K 0.50% 1/16W
R264	1-216-821-11	s	METAL, CHIP 1K 5% 1/16W
R265	1-218-664-11	s	METAL 68 0.50% 1/16W
R266	1-218-285-11	s	METAL, CHIP 75 5% 1/16W
R267	1-218-668-11	s	METAL 100 0.50% 1/16W
R268	1-218-708-11	s	METAL 4.7K 0.50% 1/16W
R269	1-216-821-11	s	METAL, CHIP 1K 5% 1/16W
R270	1-218-716-11	s	METAL 10K 0.50% 1/16W
R271	1-216-793-11	s	METAL 4.7 5% 1/16W
R272	1-218-668-11	s	METAL 100 0.50% 1/16W
R273	1-218-716-11	s	METAL 10K 0.50% 1/16W
R274	1-218-695-11	s	METAL 1.3K 0.50% 1/16W
R275	1-218-272-11	s	METAL 5.1K 0.50% 1/16W
R276	1-218-664-11	s	METAL 68 0.50% 1/16W
R277	1-218-285-11	s	METAL, CHIP 75 5% 1/16W
R278	1-218-716-11	s	METAL 10K 0.50% 1/16W
R279	1-216-821-11	s	METAL, CHIP 1K 5% 1/16W
R280	1-218-668-11	s	METAL 100 0.50% 1/16W
R281	1-216-821-11	s	METAL, CHIP 1K 5% 1/16W
R282	1-218-745-11	s	METAL 160K 0.50% 1/16W
R283	1-218-680-11	s	METAL 330 0.50% 1/16W
R284	1-218-668-11	s	METAL 100 0.50% 1/16W
R285	1-218-704-11	s	METAL 3.3K 0.50% 1/16W
R401	1-216-821-11	s	METAL, CHIP 1K 5% 1/16W

(VDA-18 BOARD)

Ref. No. or Q'ty	Part No.	SP	Description
R402	1-216-821-11	s	METAL, CHIP 1K 5% 1/16W
R403	1-218-883-11	s	METAL 33K 0.50% 1/16W
R404	1-218-664-11	s	METAL 68 0.50% 1/16W
R405	1-218-716-11	s	METAL 10K 0.50% 1/16W
R406	1-218-289-11	s	METAL, CHIP 510 5% 1/16W
R407	1-218-745-11	s	METAL 160K 0.50% 1/16W
R408	1-216-821-11	s	METAL, CHIP 1K 5% 1/16W
R409	1-218-668-11	s	METAL 100 0.50% 1/16W
R410	1-216-822-11	s	METAL, CHIP 1.2K 5% 1/16W
R411	1-218-668-11	s	METAL 100 0.50% 1/16W
R412	1-216-821-11	s	METAL, CHIP 1K 5% 1/16W
R413	1-218-732-11	s	METAL 47K 0.50% 1/16W
R414	1-216-864-11	s	METAL, CHIP 0-OHM
R415	1-218-269-11	s	METAL, CHIP 360 5% 1/16W
R416	1-216-823-11	s	METAL, CHIP 1.5K 5% 1/16W
R417	1-218-724-11	s	METAL 22K 0.50% 1/16W
R418	1-218-724-11	s	METAL 22K 0.50% 1/16W
R419	1-216-823-11	s	METAL, CHIP 1.5K 5% 1/16W
R420	1-218-269-11	s	METAL, CHIP 360 5% 1/16W
R421	1-216-816-11	s	METAL, CHIP 390 5% 1/16W
R422	1-216-822-11	s	METAL, CHIP 1.2K 5% 1/16W
R425	1-218-668-11	s	METAL 100 0.50% 1/16W
R426	1-218-740-11	s	METAL 100K 0.50% 1/16W
R427	1-218-700-11	s	METAL 2.2K 0.50% 1/16W
R428	1-218-700-11	s	METAL 2.2K 0.50% 1/16W
R429	1-218-668-11	s	METAL 100 0.50% 1/16W
R430	1-218-313-11	s	METAL, CHIP 560 1% 1/16W
R431	1-218-704-11	s	METAL 3.3K 0.50% 1/16W
R432	1-218-706-11	s	METAL 3.9K 0.50% 1/16W
R433	1-218-288-11	s	METAL, CHIP 300 5% 1/16W
R434	1-218-289-11	s	METAL, CHIP 510 5% 1/16W
R435	1-216-821-11	s	METAL, CHIP 1K 5% 1/16W
R436	1-216-821-11	s	METAL, CHIP 1K 5% 1/16W
R437	1-218-745-11	s	METAL 160K 0.50% 1/16W
R438	1-218-664-11	s	METAL 68 0.50% 1/16W
R439	1-218-288-11	s	METAL, CHIP 300 5% 1/16W
R440	1-216-817-11	s	METAL, CHIP 470 5% 1/16W
R441	1-216-820-11	s	METAL, CHIP 820 5% 1/16W
R442	1-216-823-11	s	METAL, CHIP 1.5K 5% 1/16W
R443	1-216-820-11	s	METAL, CHIP 820 5% 1/16W
R444	1-218-745-11	s	METAL 160K 0.50% 1/16W
R445	1-218-664-11	s	METAL 68 0.50% 1/16W
R446	1-218-688-11	s	METAL 680 0.50% 1/16W
R447	1-218-680-11	s	METAL 330 0.50% 1/16W
R448	1-218-695-11	s	METAL 1.3K 0.50% 1/16W
R449	1-218-651-11	s	METAL 20 0.50% 1/16W
R450	1-216-822-11	s	METAL, CHIP 1.2K 5% 1/16W
R451	1-218-745-11	s	METAL 160K 0.50% 1/16W
R452	1-216-821-11	s	METAL, CHIP 1K 5% 1/16W
R453	1-218-664-11	s	METAL 68 0.50% 1/16W
R454	1-218-285-11	s	METAL, CHIP 75 5% 1/16W
R455	1-216-826-11	s	METAL, CHIP 2.7K 5% 1/16W
R456	1-218-716-11	s	METAL 10K 0.50% 1/16W
R457	1-218-668-11	s	METAL 100 0.50% 1/16W
R458	1-218-708-11	s	METAL 4.7K 0.50% 1/16W
R459	1-216-821-11	s	METAL, CHIP 1K 5% 1/16W
R460	1-218-716-11	s	METAL 10K 0.50% 1/16W
R461	1-216-793-11	s	METAL 4.7 5% 1/16W
R462	1-218-668-11	s	METAL 100 0.50% 1/16W

(VDA-18 BOARD)

Ref. No. or Q'ty	Part No.	SP	Description
R463	1-218-716-11	s	METAL 10K 0.50% 1/16W
R464	1-218-695-11	s	METAL 1.3K 0.50% 1/16W
R465	1-218-272-11	s	METAL 5.1K 0.50% 1/16W
R466	1-218-664-11	s	METAL 68 0.50% 1/16W
R467	1-218-285-11	s	METAL, CHIP 75 5% 1/16W
R468	1-218-716-11	s	METAL 10K 0.50% 1/16W
R479	1-216-821-11	s	METAL, CHIP 1K 5% 1/16W
R480	1-218-668-11	s	METAL 100 0.50% 1/16W
R481	1-216-821-11	s	METAL, CHIP 1K 5% 1/16W
R482	1-218-745-11	s	METAL 160K 0.50% 1/16W
R483	1-218-680-11	s	METAL 330 0.50% 1/16W
R484	1-218-668-11	s	METAL 100 0.50% 1/16W
R485	1-218-704-11	s	METAL 3.3K 0.50% 1/16W
R486	1-216-821-11	s	METAL, CHIP 1K 5% 1/16W
R487	1-218-721-11	s	METAL 16K 0.50% 1/16W
R601	1-218-716-11	s	METAL 10K 0.50% 1/16W
R602	1-218-661-11	s	METAL 51 0.50% 1/16W
R603	1-218-661-11	s	METAL 51 0.50% 1/16W
R604	1-218-661-11	s	METAL 51 0.50% 1/16W
R605	1-218-661-11	s	METAL 51 0.50% 1/16W
R606	1-218-883-11	s	METAL 33K 0.50% 1/16W
R607	1-218-883-11	s	METAL 33K 0.50% 1/16W
R608	1-218-704-11	s	METAL 3.3K 0.50% 1/16W
R609	1-218-700-11	s	METAL 2.2K 0.50% 1/16W
R610	1-216-821-11	s	METAL, CHIP 1K 5% 1/16W
R611	1-218-704-11	s	METAL 3.3K 0.50% 1/16W
R612	1-218-271-11	s	METAL 2K 0.50% 1/16W
R613	1-216-797-11	s	METAL, CHIP 10 5% 1/16W
R614	1-218-271-11	s	METAL 2K 0.50% 1/16W
R615	1-218-663-11	s	METAL 62 0.50% 1/16W
R616	1-216-821-11	s	METAL, CHIP 1K 5% 1/16W
R617	1-218-745-11	s	METAL 160K 0.50% 1/16W
R618	1-218-700-11	s	METAL 2.2K 0.50% 1/16W
R619	1-218-700-11	s	METAL 2.2K 0.50% 1/16W
R620	1-218-723-11	s	METAL 20K 0.50% 1/16W
R621	1-218-675-11	s	METAL 200 0.50% 1/16W
R622	1-216-823-11	s	METAL, CHIP 1.5K 5% 1/16W
R623	1-216-808-11	s	METAL, CHIP 82 5% 1/16W
R624	1-218-484-11	s	METAL 750 0.50% 1/16W
R625	1-218-484-11	s	METAL 750 0.50% 1/16W
R626	1-218-716-11	s	METAL 10K 0.50% 1/16W
R627	1-218-484-11	s	METAL 750 0.50% 1/16W
R628	1-218-484-11	s	METAL 750 0.50% 1/16W
R629	1-218-745-11	s	METAL 160K 0.50% 1/16W
R630	1-218-883-11	s	METAL 33K 0.50% 1/16W
R631	1-216-789-11	s	METAL, CHIP 2.2 5% 1/16W
R632	1-216-789-11	s	METAL, CHIP 2.2 5% 1/16W
R633	1-218-664-11	s	METAL 68 0.50% 1/16W
R634	1-218-285-11	s	METAL, CHIP 75 5% 1/16W
R635	1-218-285-11	s	METAL, CHIP 75 5% 1/16W
R636	1-218-285-11	s	METAL, CHIP 75 5% 1/16W
R637	1-216-822-11	s	METAL, CHIP 1.2K 5% 1/16W
R638	1-218-708-11	s	METAL 4.7K 0.50% 1/16W
R639	1-218-716-11	s	METAL 10K 0.50% 1/16W
R640	1-218-716-11	s	METAL 10K 0.50% 1/16W
R641	1-218-289-11	s	METAL, CHIP 510 5% 1/16W
R642	1-216-865-11	s	METAL, CHIP 3K 1/16W
R643	1-218-714-11	s	METAL 8.2K 0.50% 1/16W
R644	1-218-288-11	s	METAL, CHIP 300 5% 1/16W

(VDA-18 BOARD)

Ref. No. or Q'ty	Part No.	SP	Description
R645	1-218-704-11	s	METAL 3.3K 0.50% 1/16W
R646	1-218-707-11	s	METAL 4.3K 0.50% 1/16W
R647	1-216-865-11	s	METAL, CHIP 3K 1/16W
R648	1-218-680-11	s	METAL 330 0.50% 1/16W
R649	1-218-704-11	s	METAL 3.3K 0.50% 1/16W
R650	1-216-836-11	s	METAL, CHIP 18K 5% 1/16W
R651	1-218-750-11	s	METAL 270K 0.50% 1/16W
R652	1-216-821-11	s	METAL, CHIP 1K 5% 1/16W
R653	1-218-723-11	s	METAL 20K 0.50% 1/16W
R654	1-218-723-11	s	METAL 20K 0.50% 1/16W
R655	1-218-289-11	s	METAL, CHIP 510 5% 1/16W
R656	1-218-289-11	s	METAL, CHIP 510 5% 1/16W
R657	1-218-289-11	s	METAL, CHIP 510 5% 1/16W
R658	1-218-740-11	s	METAL 100K 0.50% 1/16W
R659	1-218-740-11	s	METAL 100K 0.50% 1/16W
R660	1-218-740-11	s	METAL 100K 0.50% 1/16W
R661	1-218-288-11	s	METAL, CHIP 300 5% 1/16W
R662	1-218-716-11	s	METAL 10K 0.50% 1/16W
R663	1-218-716-11	s	METAL 10K 0.50% 1/16W
R664	1-218-272-11	s	METAL 5.1K 0.50% 1/16W
R665	1-218-272-11	s	METAL 5.1K 0.50% 1/16W
R666	1-218-664-11	s	METAL 68 0.50% 1/16W
R667	1-218-664-11	s	METAL 68 0.50% 1/16W
R668	1-218-676-11	s	METAL 220 0.50% 1/16W
R669	1-218-676-11	s	METAL 220 0.50% 1/16W
R670	1-216-821-11	s	METAL, CHIP 1K 5% 1/16W
R671	1-216-821-11	s	METAL, CHIP 1K 5% 1/16W
R672	1-216-821-11	s	METAL, CHIP 1K 5% 1/16W
R673	1-216-821-11	s	METAL, CHIP 1K 5% 1/16W
R674	1-218-272-11	s	METAL 5.1K 0.50% 1/16W
R675	1-218-272-11	s	METAL 5.1K 0.50% 1/16W
R676	1-218-272-11	s	METAL 5.1K 0.50% 1/16W
R677	1-218-272-11	s	METAL 5.1K 0.50% 1/16W
R678	1-218-271-11	s	METAL 2K 0.50% 1/16W
R679	1-218-883-11	s	METAL 33K 0.50% 1/16W
R680	1-218-716-11	s	METAL 10K 0.50% 1/16W
R681	1-218-716-11	s	METAL 10K 0.50% 1/16W
R682	1-218-708-11	s	METAL 4.7K 0.50% 1/16W
R683	1-218-708-11	s	METAL 4.7K 0.50% 1/16W
R684	1-216-821-11	s	METAL, CHIP 1K 5% 1/16W
R686	1-216-821-11	s	METAL, CHIP 1K 5% 1/16W
R687	1-218-708-11	s	METAL 4.7K 0.50% 1/16W
R688	1-218-745-11	s	METAL 160K 0.50% 1/16W
R689	1-218-701-11	s	METAL 2.4K 0.50% 1/16W
R690	1-218-664-11	s	METAL 68 0.50% 1/16W
R691	1-216-823-11	s	METAL, CHIP 1.5K 5% 1/16W
R692	1-218-484-11	s	METAL 750 0.50% 1/16W
R693	1-218-704-11	s	METAL 3.3K 0.50% 1/16W
R694	1-218-700-11	s	METAL 2.2K 0.50% 1/16W
R695	1-218-688-11	s	METAL 680 0.50% 1/16W
R696	1-218-688-11	s	METAL 680 0.50% 1/16W
R697	1-216-821-11	s	METAL, CHIP 1K 5% 1/16W
R698	1-216-821-11	s	METAL, CHIP 1K 5% 1/16W
R699	1-218-745-11	s	METAL 160K 0.50% 1/16W
R700	1-218-664-11	s	METAL 68 0.50% 1/16W
R701	1-218-883-11	s	METAL 33K 0.50% 1/16W
R702	1-216-797-11	s	METAL, CHIP 10 5% 1/16W
R703	1-216-797-11	s	METAL, CHIP 10 5% 1/16W
R704	1-218-668-11	s	METAL 100 0.50% 1/16W

(VDA-18 BOARD)

Ref. No. or Q'ty	Part No.	SP	Description
R705	1-218-289-11	s	METAL, CHIP 510 5% 1/16W
R706	1-216-822-11	s	METAL, CHIP 1.2K 5% 1/16W
R707	1-218-695-11	s	METAL 1.3K 0.50% 1/16W
R708	1-218-727-11	s	METAL 30K 0.50% 1/16W
R709	1-216-797-11	s	METAL, CHIP 10 5% 1/16W
R710	1-216-797-11	s	METAL, CHIP 10 5% 1/16W
R711	1-218-740-11	s	METAL 100K 0.50% 1/16W
R712	1-218-883-11	s	METAL 33K 0.50% 1/16W
R713	1-218-883-11	s	METAL 33K 0.50% 1/16W
R714	1-218-740-11	s	METAL 100K 0.50% 1/16W
R715	1-218-883-11	s	METAL 33K 0.50% 1/16W
R716	1-218-883-11	s	METAL 33K 0.50% 1/16W
R717	1-216-821-11	s	METAL, CHIP 1K 5% 1/16W
R718	1-218-345-11	s	METAL 9.1K 0.50% 1/16W
R719	1-218-698-11	s	METAL 1.8K 0.50% 1/16W
R720	1-216-804-11	s	METAL 39K 0.50% 1/16W
R721	1-218-706-11	s	METAL 3.9K 0.50% 1/16W
R722	1-216-821-11	s	METAL, CHIP 1K 5% 1/16W
R723	1-218-704-11	s	METAL 3.3K 0.50% 1/16W
R724	1-218-698-11	s	METAL 1.8K 0.50% 1/16W
R725	1-218-716-11	s	METAL 10K 0.50% 1/16W
R726	1-218-724-11	s	METAL 22K 0.50% 1/16W
R727	1-218-670-11	s	METAL 120 0.50% 1/16W
R728	1-218-670-11	s	METAL 120 0.50% 1/16W
R729	1-218-670-11	s	METAL 120 0.50% 1/16W
R730	1-218-723-11	s	METAL 20K 0.50% 1/16W
R731	1-218-723-11	s	METAL 20K 0.50% 1/16W
R732	1-218-271-11	s	METAL 2K 0.50% 1/16W
R733	1-218-750-11	s	METAL 270K 0.50% 1/16W
R734	1-218-750-11	s	METAL 270K 0.50% 1/16W
R735	1-218-675-11	s	METAL 200 0.50% 1/16W
R736	1-218-675-11	s	METAL 200 0.50% 1/16W
R737	1-218-716-11	s	METAL 10K 0.50% 1/16W
RV1	1-237-036-11	s	RES, ADJ, METAL 10K
RV2	1-237-038-11	s	RES, ADJ, METAL 50K
RV3	1-237-032-11	s	RES, ADJ, METAL 500
RV4	1-237-031-11	s	RES, ADJ, METAL 200
RV5	1-237-031-11	s	RES, ADJ, METAL 200
RV6	1-237-031-11	s	RES, ADJ, METAL 200
RV201	1-237-036-11	s	RES, ADJ, METAL 10K
RV202	1-237-038-11	s	RES, ADJ, METAL 50K
RV203	1-237-032-11	s	RES, ADJ, METAL 500
RV204	1-237-031-11	s	RES, ADJ, METAL 200
RV205	1-237-031-11	s	RES, ADJ, METAL 200
RV401	1-237-036-11	s	RES, ADJ, METAL 10K
RV402	1-237-038-11	s	RES, ADJ, METAL 50K
RV403	1-237-032-11	s	RES, ADJ, METAL 500
RV404	1-237-031-11	s	RES, ADJ, METAL 200
RV405	1-237-031-11	s	RES, ADJ, METAL 200
RV406	1-237-031-11	s	RES, ADJ, METAL 200
RV601	1-237-032-11	s	RES, ADJ, METAL 500
RV602	1-237-032-11	s	RES, ADJ, METAL 500

VR-124 BOARD

Ref. No. or Q'ty	Part No.	SP	Description
CN124	1-580-533-11	s	PIN, CONNECTOR (PC BOARD) 8P
RV1	1-223-165-00	s	RES, ADJ, WIREWOUND 10K
RV2	1-223-165-00	s	RES, ADJ, WIREWOUND 10K
RV3	1-223-165-00	s	RES, ADJ, WIREWOUND 10K
RV4	1-223-166-00	s	RES, ADJ, WIREWOUND 2K

FRAME

Ref. No. or Q'ty	Part No.	SP	Description
1pc	1-950-624-12	o	HARNESS (GND)
CN101	1-562-221-51	s	CONNECTOR, 12P FEMALE "VF"
CN103	1-560-494-00	s	CONNECTOR, BNC, MALE "MONITOR"
CN104	1-950-197-11	o	HARNESS (VTR)
	1-562-244-00	o	CONNECTOR, 26P, MALE "VTR"
CN105	1-561-376-21	s	CONNECTOR, 4P FEMALE "DC OUT"
CN106	1-565-908-11	s	CONNECTOR,XLR 4P,MALE "DC IN"
CN107	1-949-917-22	o	HARNESS (CHU)
	1-568-911-21	o	HOUSING, CONNECTOR (D02 F) 29P
CN108	1-507-251-99	s	JACK "EARPHONE"
CN110	1-562-221-51	s	CONNECTOR, 12P FEMALE "REMOTE"
CN112	1-950-218-11	o	HARNESS (INCOM-2) "INCOM"
CN1F (TO DP-158 BOARD)			
	1-580-580-11	o	HOUSING, 8P
	1-580-599-11	o	CONTACT, FEMALE, AWG26-30
CN1F (TO MA-48 BOARD)			
	1-580-582-11	o	HOUSING, 12P
	1-580-599-11	o	CONTACT, FEMALE, AWG26-30
CN1F (TO RE-76 BOARD)			
	1-580-582-11	o	HOUSING, 12P
	1-580-599-11	o	CONTACT, FEMALE, AWG26-30
CN1F (TO VR-124 BOARD)			
	1-580-580-11	o	HOUSING, 8P
	1-580-599-11	o	CONTACT, FEMALE, AWG26-30
CN2F (TO CN-784 BOARD)			
	1-580-579-11	o	HOUSING, 6P
	1-580-599-11	o	CONTACT, FEMALE, AWG26-30
CN3F (TO MA-48 BOARD)			
	1-580-580-11	o	HOUSING, 8P
	1-580-599-11	o	CONTACT, FEMALE, AWG26-30
CN4F (TO CN-784 BOARD)			
	1-580-579-11	o	HOUSING, 6P
	1-580-599-11	o	CONTACT, FEMALE, AWG26-30
CN4F (TO MA-48 BOARD)			
	1-580-578-11	s	HOUSING, 4P
	1-580-599-11	o	CONTACT, FEMALE, AWG26-30
CN5F (TO MA-48 BOARD)			
	1-580-578-11	s	HOUSING, 4P
	1-580-599-11	o	CONTACT, FEMALE, AWG26-30
CN8F (TO MB-366 BOARD)			
	1-580-582-11	o	HOUSING, 12P
	1-580-599-11	o	CONTACT, FEMALE, AWG26-30
CN9F (TO MB-366 BOARD)			
	1-580-579-11	o	HOUSING, 6P
	1-580-599-11	o	CONTACT, FEMALE, AWG26-30
CN10F (TO MB-366 BOARD)			
	1-580-581-11	o	HOUSING, 10P
	1-580-599-11	o	CONTACT, FEMALE, AWG26-30
CN11F (TO MB-366 BOARD)			
	1-580-578-11	s	HOUSING, 4P
	1-580-599-11	o	CONTACT, FEMALE, AWG26-30
CN12F (TO MB-366 BOARD)			
	1-580-578-11	s	HOUSING, 4P
	1-580-599-11	o	CONTACT, FEMALE, AWG26-30

(FRAME)

Ref. No. or Q'ty	Part No.	SP	Description
CN14F (TO MB-366 BOARD)			
	1-580-589-11	o	HOUSING, 26P
	1-580-599-11	o	CONTACT, FEMALE, AWG26-30
CN15F (TO MB-366 BOARD)			
	1-580-582-11	o	HOUSING, 12P
	1-580-599-11	o	CONTACT, FEMALE, AWG26-30
CN16F (TO MB-366 BOARD)			
	1-580-579-11	o	HOUSING, 6P
	1-580-599-11	o	CONTACT, FEMALE, AWG26-30
CN17F (TO MB-366 BOARD)			
	1-580-579-11	o	HOUSING, 6P
	1-580-599-11	o	CONTACT, FEMALE, AWG26-30
CN18F (TO MB-366 BOARD)			
	1-580-580-11	o	HOUSING, 8P
	1-580-599-11	o	CONTACT, FEMALE, AWG26-30
CN19F (TO MB-366 BOARD)			
	1-580-582-11	o	HOUSING, 12P
	1-580-599-11	o	CONTACT, FEMALE, AWG26-30
CN22F (TO MB-366 BOARD)			
	1-580-580-11	o	HOUSING, 8P
	1-580-599-11	o	CONTACT, FEMALE, AWG26-30
CN25F (TO MB-366 BOARD)			
	1-580-579-11	o	HOUSING, 6P
	1-580-599-11	o	CONTACT, FEMALE, AWG26-30
CN27F (TO MB-366 BOARD)			
	1-580-580-11	o	HOUSING, 8P
	1-580-599-11	o	CONTACT, FEMALE, AWG26-30
CN28F (TO MB-366 BOARD)			
	1-580-582-11	o	HOUSING, 12P
	1-580-599-11	o	CONTACT, FEMALE, AWG26-30
CN78F (TO CN-782 BOARD)			
	1-580-582-11	o	HOUSING, 12P
	1-580-599-11	o	CONTACT, FEMALE, AWG26-30
CN498F (TO SW-498 BOARD)			
	1-580-579-11	o	HOUSING, 6P
	1-580-599-11	o	CONTACT, FEMALE, AWG26-30
S101	1-571-367-11	s	SWITCH, TOGGLE "POWER ON/OFF"
S102	1-571-070-11	s	SWITCH, TOGGLE "MIC ON/OFF"
RV101	1-237-981-11	s	RES, VAR, CARBON 20K "INCOM LEVEL"

PACKING MATERIALS & SUPPLIED ACCESSORIES

Ref. No. or Q'ty	Part No.	SP	Description
1pc	A-8270-417-A	o	MOUNTED CIRCUIT BOARD, CN-783
1pc	1-950-217-12	o	HARNESS (INCOM-1)
1pc	3-176-318-01	o	PANEL (4) (A), CONNECTOR
5pcs	7-627-556-77	s	SCREW,PRECISION +P2.6X6 TYPE 1

HDCA-50
3-176-320-01

Sony Corporation
Camera Products Group

Printed in Japan
1992. 11 09
© 1992
Published by B & P Marketing Group